THIS DRAWING IS UNPUBLISHED: RELEASED FOR PUBLICATION -.-.-
© COPYRIGHT - - BY TYCO ELECTRONICS CORPORATION. ALL RIGHTS RESERVED.

LOC	DIST
DF	DO

REVISIONS

P	LTR	DESCRIPTION	DATE	DRN	APVD
	H	REV PER ECO-06-018048	06OCT06	PY	DM

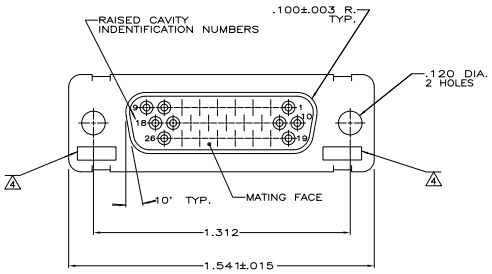

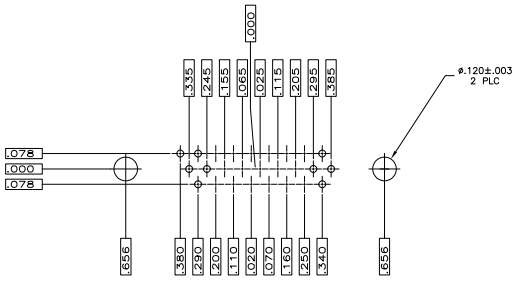

RECOMMENED P.C. BOARD LAYOUT

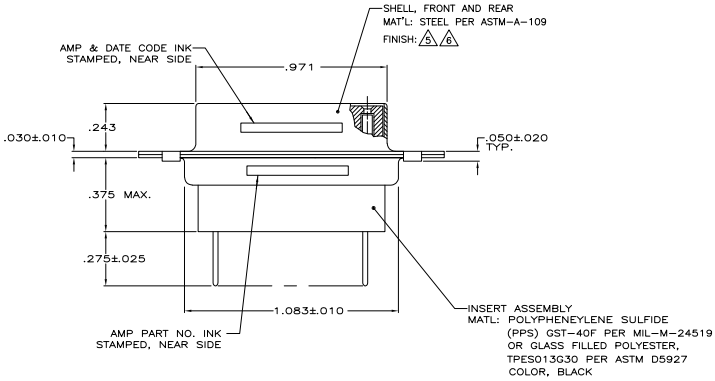

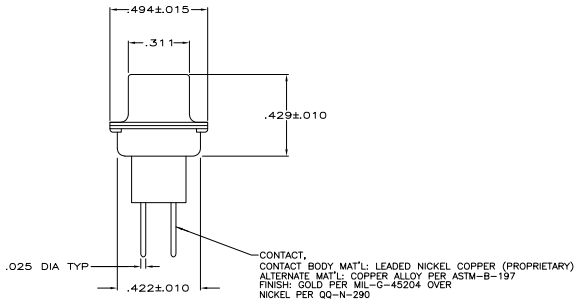

1. .040 DIA HOLE IS RECOMMENED FOR P.C. BOARD
2. CONNECTOR MATES WITH ANY AMP 26 POSN PLUG
3. REPLACEMENT SOCKET AMP# 207684-4
4. UL/CSA DESIGNATION STAMPED IN THIS AREA.
5. FINISH: CADMIUM PER QQ-P-416
6. FINISH: ZINC PLATED PER ASTM-B-633, .000200-.000400 THK WITH SUPPLEMENTARY CHROMATE (Cr3+)

DESCRIPTION	PART NO.
PLATED PER 6	5-208873-1
PLATED PER 5	208873-1

THIS DRAWING IS A CONTROLLED DOCUMENT.

DRAWN	C.C.THOMAS	1-6-88
CHK	F.C.BALLEW III	1-25-88
APVD	-	
PRODUCT SPEC	—	
APPLICATION SPEC	—	
WEIGHT	—	

DIMENSIONS: INCHES
TOLERANCE UNLESS OTHERWISE SPECIFIED:
0 PLC ± –
1 PLC ± –
2 PLC ± –
3 PLC ± .005
4 PLC ± .005
ANGLES ± –
MATERIAL: SEE CALLOUTS
FINISH: SEE CALLOUTS

Tyco Electronics
Tyco Electronics Corporation
Harrisburg, Pa 17105-3608

NAME: AMPLIMITE 26 POSN. RCPT. ASSY., W/ LOADED POSTED CONTACTS SIZE 2, SERIES 90

SIZE	CAGE CODE	DRAWING NO	RESTRICTED TO
A1	00779	C-208873	—

CUSTOMER DRAWING | SCALE 4:1 | SHEET 1 OF 1 | REV H

Downloaded from Elcodis.com electronic components distributor