THIS DRAWING IS UNPUBLISHED. RELEASED FOR PUBLICATION -.-.-
© COPYRIGHT - - BY TYCO ELECTRONICS CORPORATION. ALL RIGHTS RESERVED.

UOC	DIST
DF	DO

REVISIONS

P	LTR	DESCRIPTION	DATE	DWN	APVD
	L	REVISED PER ECO-09-013125	08JUN09	CT	RL

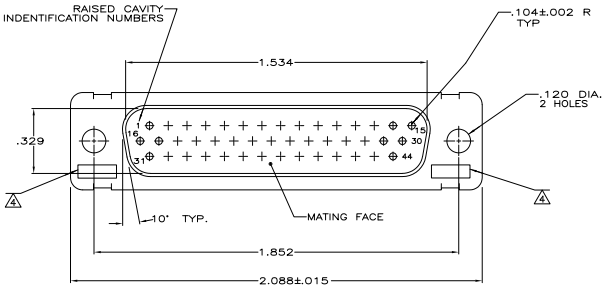

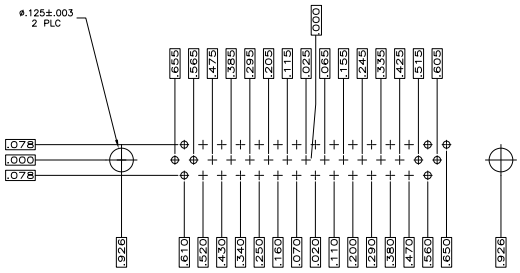

RECOMMENDED P.C. BOARD LAYOUT

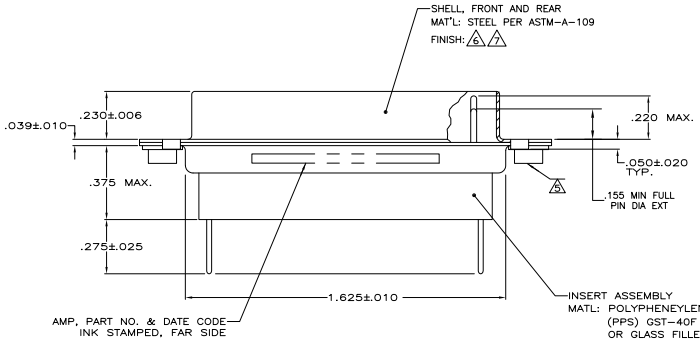

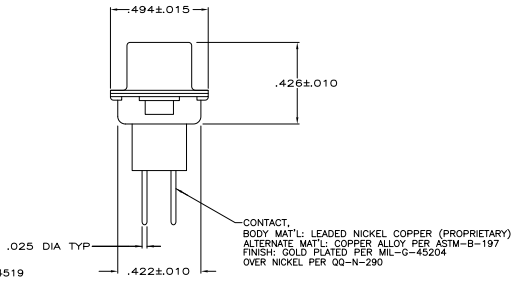

1. .040 DIA HOLE IS RECOMMENED FOR P.C. BOARD
2. CONNECTOR MATES WITH ANY AMP 44 POSN RECEPTACLE
3. REPLACEMENT PIN AMP# 207683-8
4. UL/CSA DESIGNATION STAMPED IN THIS AREA.
5. CLINCH NUT(QTY = 2) IS USED ON 208868-3 ONLY.
6. FINISH: CADMIUM PER QQ-P-416
7. FINISH: ZINC PLATED PER ASTM-B-633, .000200-.000400 THK WITH SUPPLEMENTARY CHROMATE (Cr3+)

DESCRIPTION	PART NO.
PLATED PER 7	5-208868-1
5, PLATED PER 6	208868-3
PLATED PER 6	208868-2
PLATED PER 6	208868-1

THIS DRAWING IS A CONTROLLED DOCUMENT.

DIMENSIONS: INCHES
TOLERANCE UNLESS OTHERWISE SPECIFIED
0 PLC ± –
1 PLC ± –
2 PLC ± –
3 PLC ± .005
4 PLC ± .002
ANGLES ± –

MATERIAL: SEE CALLOUTS
FINISH: SEE CALLOUTS

DR: C.C.THOMAS 1-7-88
CK: F.C.BALLEW III 1-26-88
APVD: –
PRODUCT SPEC: –
APPLICATION SPEC: –
WEIGHT: –

Tyco Electronics
Tyco Electronics Corporation
Harrisburg, Pa 17105-3608

NAME: AMPLIMITE 44 POSN. PLUG ASSY., W/ LOADED POSTED CONTACTS SIZE 3, SERIES 90

SIZE: A1 | CAGE CODE: 00779 | DRAWING NO: C-208868 | RESTRICTED TO: –

CUSTOMER DRAWING | SCALE: 4:1 | SHEET 1 OF 1 | REV L

AMP 4805 REV 31MAR2000

10JUN2009 ug016412 H:\docmpd\208868_1_c.dwg

Downloaded from Elcodis.com electronic components distributor