THIS DRAWING IS UNPUBLISHED. RELEASED FOR PUBLICATION -,- .

© COPYRIGHT - BY TYCO ELECTRONICS CORPORATION. ALL INTERNATIONAL RIGHTS RESERVED.

LOC	DIST
EY	25

REVISIONS

P	LTR	DESCRIPTION	DATE	DWN	APVD
	A	DRAWN	-	—	—

1 MATERIAL: POLYISOBUTYLENE SELF-AMALGAMATING TAPE, BLACK, .020 THICK.

2 SELF AMALGAMATING MATERIAL HAS A 5 YEAR SHELF LIFE, WHICH BEGINS THE DAY MADE. USE AFTER EXPIRATION CONSIDERABLY IMPEDES ITS ABILITY TO FUSE.

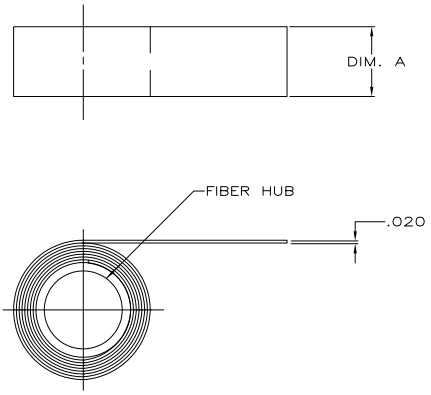

LENGTH / ROLL	DIM A	PART NO.
9.15M [30 FEET]	38.1 [1.50]	605980-3
9.15M [30 FEET]	25.4 [1.00]	605980-2
9.15M [30 FEET]	19.1 [0.75]	605980-1

THIS DRAWING IS A CONTROLLED DOCUMENT.

DIMENSIONS: MM [INCHES]

TOLERANCES UNLESS OTHERWISE SPECIFIED:
0 PLC ± -
1 PLC ± -
2 PLC ± -
3 PLC ± -
4 PLC ± -
ANGLES ± -

MATERIAL - 1

FINISH -

DWN JR RUTH 29APR10
CHK TOM MICHIELUTTI 29APR10
APVD TOM MICHIELUTTI 29APR10

PRODUCT SPEC —

APPLICATION SPEC —

WEIGHT —

Tyco Electronics Corporation
Harrisburg, PA 17105-3608

NAME TAPE, COLD SHRINK
-
-

SIZE	CAGE CODE	DRAWING NO	RESTRICTED TO
A2	00779	C-605980	—

CUSTOMER DRAWING | SCALE NONE | SHEET 1 OF 1 | REV A

605980

1471-9 (1/08)

Downloaded from Elcodis.com electronic components distributor