SHEET 1 OF 1

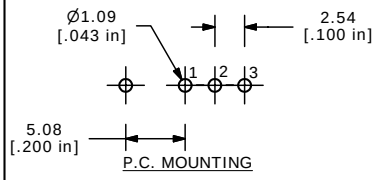

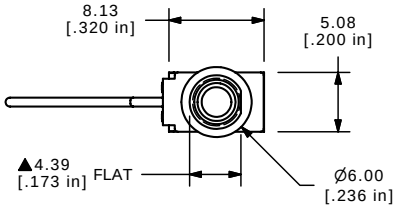

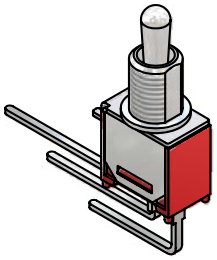

ISOMETRIC

▲

SWITCH FUNCTION		
POS. 1	POS. 2	POS. 3
ON	NONE	ON
2-3	N/A	2-1

CIRCUIT: SPDT

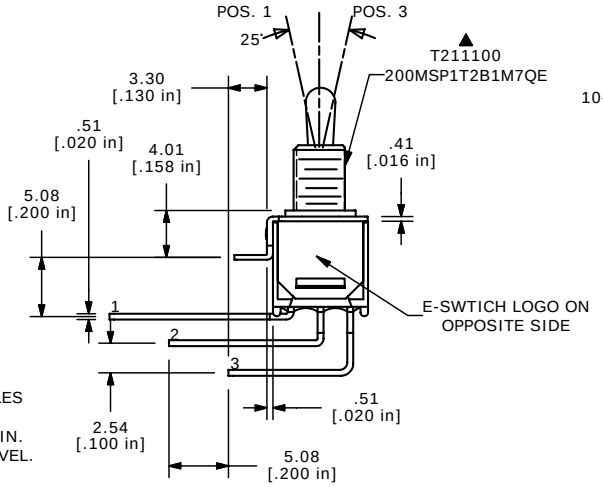

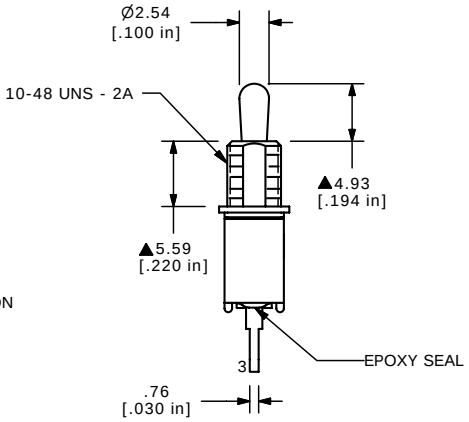

NOTE:
1. ALL DIMENSIONS IN MM [INCH]
2. GENERAL TOLERANCE: X.X=±0.4
   X.XX=±0.25
3. TERMINAL NUMBERS FOR REF ONLY
▲4. CONTACT MATERIAL: SILVER
5. RATING: 3A @ 120VAC OR 28VDC
   1A @ 250VAC
6. ELECTRIC LIFE: 30,000 MAKE-AND-BREAK CYCLES
   AT FULL LOAD.
7. INSULATION RESISTANCE: 1,000 MEGA-OHM MIN.
8. DIELECTRIC STRENGTH: 1,000 V RMS @SEA LEVEL.
9. OPERATING TEMP.: -30°C to 85°C
10. 2002/95/EC (ROHS) COMPLIANT
11. ▲ DENOTES CRITICAL PARAMETER.
▲12. HARDWARE TO BE SHIPPED BULK:
   T200000 - LOCK WASHER (1)
   T200002 - LOCK RING (1)
   T200001 - HEX NUT (2)

REV	PCR NO	DESCRIPTION	DATE	BY
A	17463	RELEASED FOR PRODUCTION	7/12/07	TN

THE INFORMATION CONTAINED IN THIS DOCUMENT IS PROPRIETARY TO E-SWITCH AND IS NOT TO BE COPIED OR TRANSFERRED

E-SWITCH™

TITLE	200MSP1T2B1M7QEH			
SCALE 2:1	DATE 7/12/2007	DR TN	DWG ST211100	REV A

Downloaded from Elcodis.com electronic components distributor