MICRO SWITCH
FREEPORT, ILLINOIS, U.S.A.
A DIVISION OF HONEYWELL
FED. MFG. CODE 91929

SWITCH-TOGGLE

CATALOG LISTING
2TW1 SERIES
CHART 1 ★

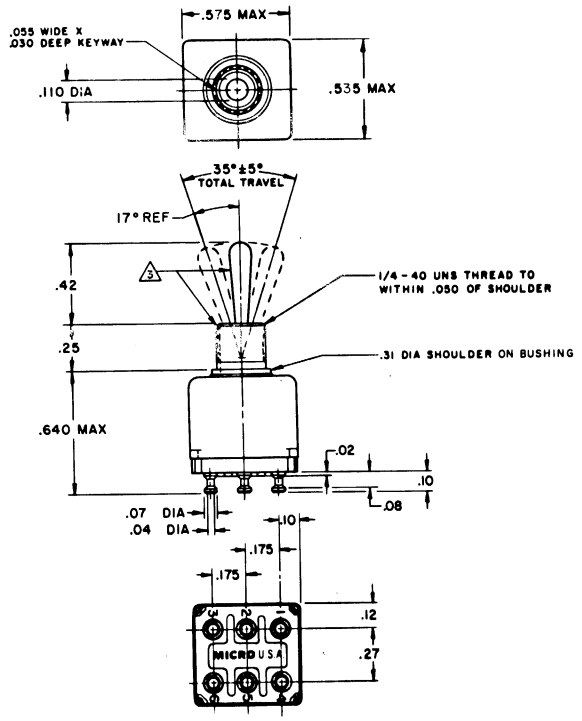

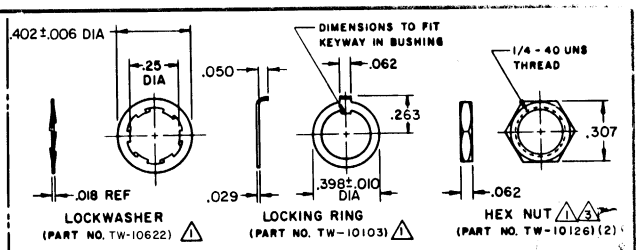

CATALOG LISTING	CIRCUIT WITH TOGGLE IN			
	ONE EXTREME POSITION (KEYWAY) 2-1 5-4	CENTER POSITION	OTHER EXTREME POSITION (OPPOSITE KEYWAY) 2-3 5-6	MS NO.
2TW1-1	ON	OFF	ON	MS27717-21-1
2TW1-2	OFF	NONE	ON	MS27717-22-1
2TW1-3	ON	NONE	ON	MS27717-23-1
2TW1-5	MOM ON	OFF	ON	MS27717-31-1
2TW1-7	MOM ON	OFF	MOM ON	MS27717-27-1
2TW1-8	MOM ON	NONE	ON	MS27717-26-1

NOTES
1 FURNISHED UNASSEMBLED
2 - TERMINALS ARE PLATED FOR SOLDERING
3 MATTE FINISH

THIS DRAWING COVERS A PROPRIETARY ITEM AND IS THE PROPERTY OF MICRO SWITCH, A DIVISION OF HONEYWELL. THIS DRAWING IS NOT TO BE COPIED OR USED WITHOUT THE APPROVAL OF MICRO SWITCH.

CHARACTERISTICS

ELECTRICAL DATA
CONTACT ARRANGEMENT
L117
5A 125 VAC

SCALE 2:1
DO NOT SCALE PRINT
TOLERANCES
DESIGN UNITS
THIRD ANGLE PROJECTION
WEIGHT .020 LB MAX

2TW1 SERIES CHART 1
REPLACES X35315
RELEASE NO. SR-12474
DRAWING NUMBER
ISSUE 15
CHECK

REVISIONS
A C057003 TSK 3 FEB 86
B C059236 JAP 27 MAR 86
C C062939 TSK 24 FEB 88

DRAWN TSK 3 FEB 86
FD-4261-B

Downloaded from Elcodis.com electronic components distributor