MICRO SWITCH
a Honeywell Division
FED.MFG.CODE 91929

SWITCH – BASIC

CATALOG LISTING
V3L–112–D8
CQ–B1201

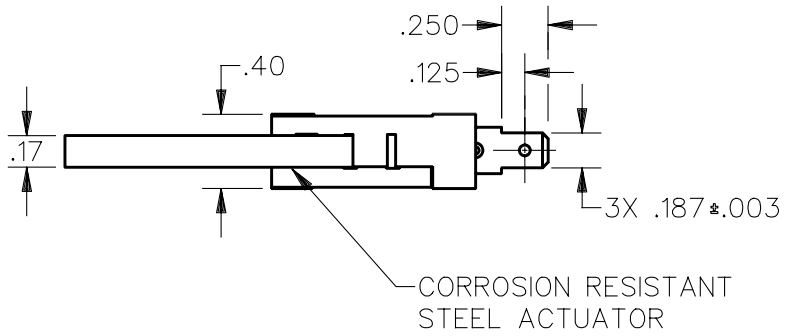

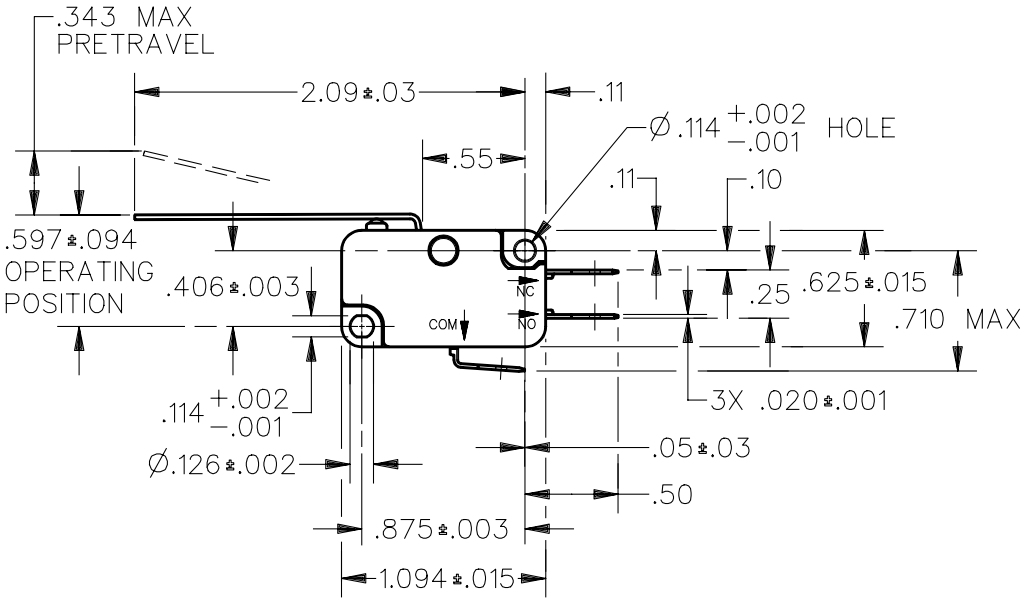

NOTE
1 – CAUTION: OVERTRAVEL FORCE ON LEVER MUST NOT RESULT IN AN OVERTRAVEL FORCE ON PLUNGER EXCEEDING FIVE POUNDS

ANSI Y14.5M–1982 APPLIES

THIS DRAWING COVERS A PROPRIETARY ITEM AND IS THE PROPERTY OF MICRO SWITCH, A DIVISION OF HONEYWELL. THIS DRAWING IS NOT TO BE COPIED OR USED WITHOUT THE APPROVAL OF MICRO SWITCH.

THIRD ANGLE PROJECTION

CHARACTERISTICS	ELECTRICAL DATA	SCALE FULL — DO NOT SCALE PRINT
OPERATING FORCE — — — 46 GRAMS MAX	CONTACT ARRANGEMENT S P D T	UNLESS OTHERWISE SPECIFIED TOLERANCES ARE
RELEASE FORCE — — — — 6 GRAMS MIN		ONE PLACE (.0) ±.030
DIFFERENTIAL TRAVEL — — — .098 MAX	L156 11A 1/3HP 125, 250 OR 277 VAC 1/2A 125 VDC, 1/4A 250 VDC 4A 125 VAC "L"	TWO PLACE (.00) ±.015
OVERTRAVEL — — — — — — .114 MIN		THREE PLACE (.000) ±.005
RELEASE TRAVEL — — — — — .031 MIN		ANGLES ±
		WEIGHT

CATALOG LISTING V3L–112–D8
PAGE 1 OF 1
ISSUE 1
REPLACES X111535–V3L
RELEASE NO. PR–23754
CHECK
REVISIONS
CHECK
CHECK J A F 18 NOV 98
CHECK T S M 18 NOV 98
DRAWN DDM/CAD

Downloaded from Elcodis.com electronic components distributor