NO.	NAME	MATERIAL	Qty
1	BUTTON	PBT	1
2	COVER	PBT	1
3	BASE UNIT	PPS(COLOR:BLACK)	1
4	TERMINAL(COM.)	BRASS(Ni+Au PLATED)	1
5	TERMINAL(N.O.)	BRASS(Ni+Au PLATED)	1
6	TERMINAL(N.C.)	BRASS(Ni+Au PLATED)	1
7	BLADE	STAINLESS(Ni+Au PLATED)	1
8	ACTUATOR	STAINLESS	1

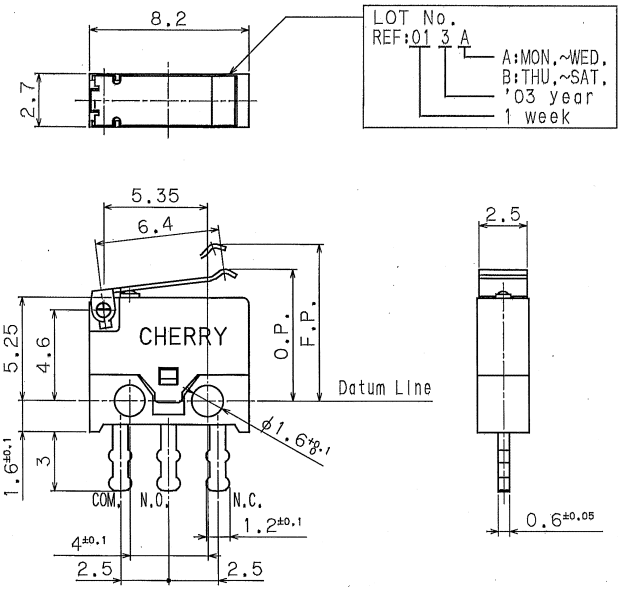

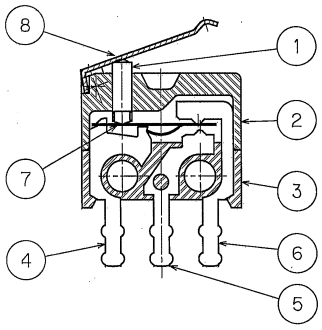

CONSTRUCTION

参考図
'03.10.29
技術部

CIRCUITRY

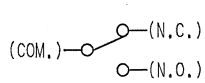

Note.1. Tolerance; unless otherwise specified ±0.2mm

REVISE	DATE	REVISE	DATE	DWN	CKD	APP	REMARKS
ECN-64656	21 Oct.'03			H.Hagihara 21 Oct.'03	T.Miyakoshi 21 Oct.'03	[illegible] 22. oct '03	
EDITION 1 FIXED	21 Oct.'03			SCALE NON	UNITS mm	PROJ. 3RD	
				HIROSE CHERRY			DIVISION GEOO

Title	Micro Switch	Part No.	DH4C-B1LA	DWG No.	305410

保管期間：販売停止より11年 技術書式E006A

Downloaded from Elcodis.com electronic components distributor