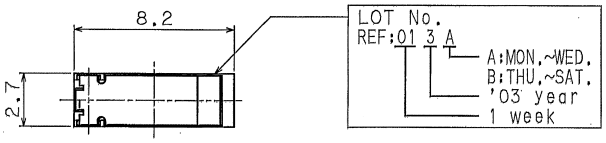

NO.	NAME	MATERIAL	Qty
1	BUTTON	PBT	1
2	COVER	PBT	1
△1 3	BASE UNIT	PPS(COLOR:BLACK)	1
△1 4	TERMINAL(COM.)	BRASS(NI+Ag PLATED)	1
△1 5	TERMINAL(N.O.)	BRASS(NI+Ag PLATED)	1
△1 6	TERMINAL(N.C.)	BRASS(NI+Ag PLATED)	1
△1 7	BLADE	STAINLESS(NI+Ag PLATED)	1
8	ACTUATOR	STAINLESS	1

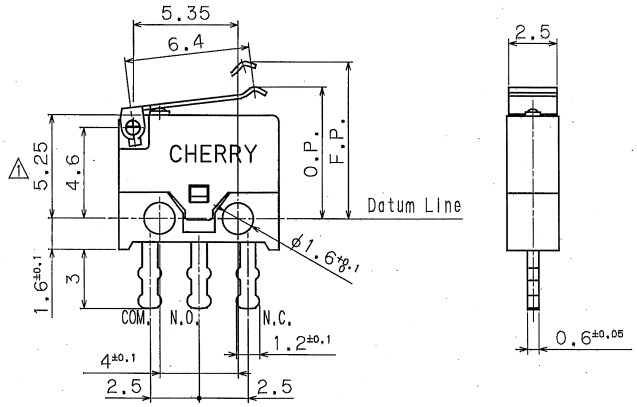

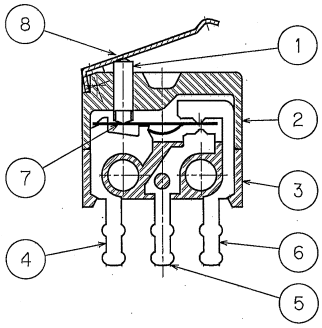

CONSTRUCTION

参考図
'03.10.29
技術部

CIRCUITRY

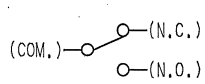

Note.1. Tolerance; unless otherwise specified ±0.2mm

△1	ECN-64657	20 Oct.'03	△1			DWN	CKD	APP	REMARKS
△1	EDITION 1 FIXED	12 May.'03	△1			H.Hagihara 20 Oct.'03	T.Mizakashi 21.Oct.'03	Y.Ishimoto 22.Oct.'03	
						SCALE NON	UNITS mm	PROJ. 3RD	
	REVISE	DATE		REVISE	DATE	HIROSE CHERRY			DIVISION GEOO
Title	Micro Switch		Part No.	DH3C-B1LA		DWG No.	305345		

保管期間：販売停止より11年 技術書式E006A

Downloaded from Elcodis.com electronic components distributor