MICRO SWITCH
a Honeywell Division
FED. MFG. CODE 91929

SWITCH-ENCLOSED

CATALOG LISTING
BAFI-2RNI8-RH
(RIGHT HAND)

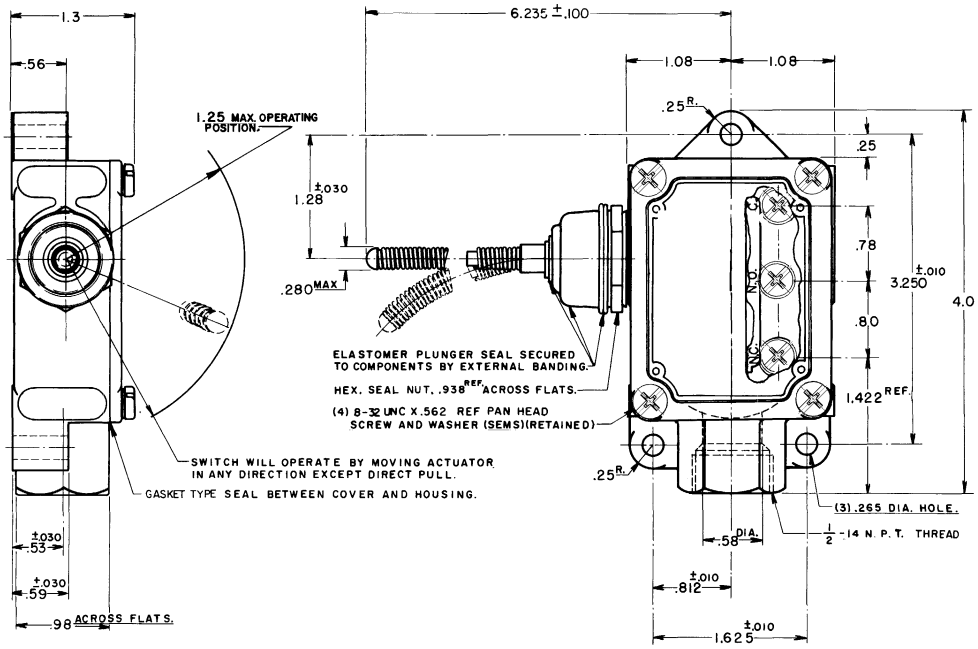

THIS DRAWING COVERS A PROPRIETARY ITEM AND IS THE PROPERTY OF MICRO SWITCH, A DIVISION OF HONEYWELL. THIS DRAWING IS NOT TO BE COPIED OR USED WITHOUT THE APPROVAL OF MICRO SWITCH

THIRD ANGLE PROJECTION

SCALE FULL

DO NOT SCALE PRINT

UNLESS OTHERWISE SPECIFIED TOLERANCES ARE

ONE PLACE	(.0)	±.030
TWO PLACE	(.00)	±.015
THREE PLACE	(.000)	±.005
ANGLES		±

WEIGHT

CHARACTERISTICS	ELECTRICAL DATA
OPERATING POSITION ———— 15° MAX	CONTACT ARRANGEMENT S P D T
BASIC SWITCH REPLACEMENT — -BA-2R708-P7	L23 20A 125, 250 OR 480 VAC 10A 125 VAC "L" 1HP 125 VAC, 2HP 250 VAC 1/2A 125 VDC, 1/4A 250 VDC

NOTE

1 – 8–32 UNC X (.219) BINDER HEAD,COMBINATION , TERMINAL SCREWS AND CUPWASHERS

SKETCH 13991
ISSUE 1
REPLACES
RELEASE NO. SR-5195
CATALOG LISTING BAFI-2RNI8-RH
PAGE 1 OF 1
ISSUE 16
CHECK

REVISIONS
A CO- 73287M GJW 11 MAY 95

CHECK 25 MAY 95 JJA
CHECK 11 MAY 95 GJW
FORMTEK
DRAWN

Downloaded from Elcodis.com electronic components distributor