MICRO SWITCH
FREEPORT, ILLINOIS, U.S.A.
A DIVISION OF HONEYWELL
FED. MFG. CODE 91929

SWITCH—ENCLOSED

CATALOG LISTING
BZE6-2RQ81

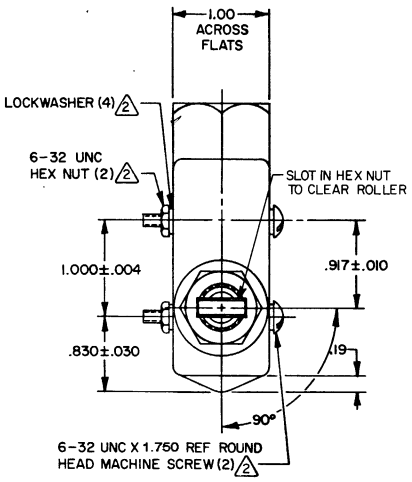

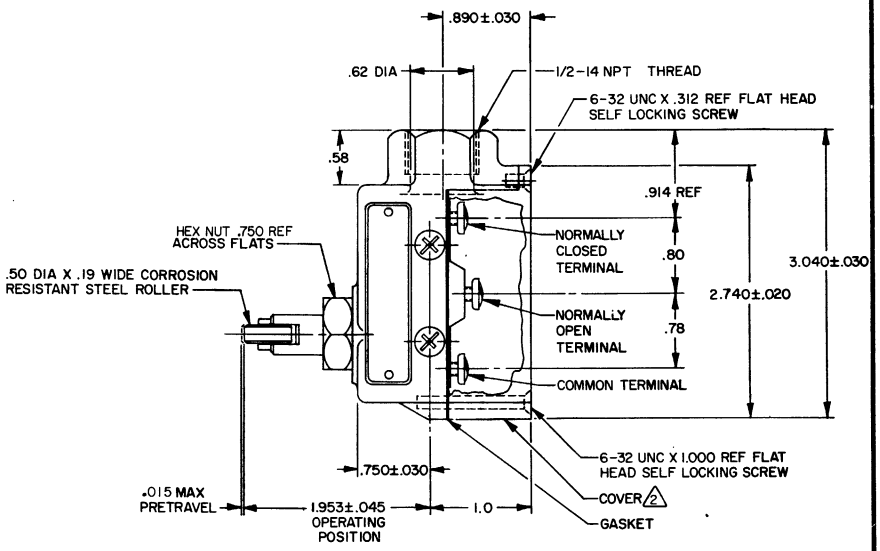

NOTES—

1 — 6-32 UNC X .219 REF BINDING HEAD TERMINAL SCREW AND CUPWASHER (3)
2 FURNISHED UNASSEMBLED
3 - SEAL RATING: NEMA 1
IP40

THIS DRAWING COVERS A PROPRIETARY ITEM AND IS THE PROPERTY OF MICRO SWITCH, A DIVISION OF HONEYWELL. THIS DRAWING IS NOT TO BE COPIED OR USED WITHOUT THE APPROVAL OF MICRO SWITCH.

CHARACTERISTICS	ELECTRICAL DATA	SCALE FULL
OPERATING FORCE — 9-13 OZ	CONTACT ARRANGEMENT S P D T	DO NOT SCALE PRINT
RELEASE FORCE — 4 OZ MIN	15A-125, 250 OR 480 VAC, 2A-600 VAC 1/8 HP-125 VAC; 1/4 HP-250 VAC 1/2A-125 VDC; 1/4A-250 VDC CODE L74	UNLESS OTHERWISE NOTED DIMENSIONS ARE IN INCHES
DIFFERENTIAL TRAVEL — .002 MAX		TOLERANCES ARE:
OVERTRAVEL — .140 MIN		ONE PLACE (.0) ±.030; TWO PLACE (.00) ±.015; THREE PLACE (.000) ±.005; ANGLES ±
BASIC SWITCH REPLACEMENT — BZ-2RQ785	CE 1.5A, 240 Vac	WEIGHT . .56 LB

M BZE6-2RQ81

DRAWING NUMBER | RELEASE NO. | REPLACES

ISSUE 10 | PSR 29AUG07 | CHECK

REVISIONS

A	CO-38200	SLB 16 SEPT 77
B	C053191F	TSK 13 APR 84
C	C055989	JAS 6 NOV 84
D	C054958	TSK 26 FEB 85
E	C072618	LJF 11 SEP 92
F	0016894	KRB 10 NOV 05
G	0033014	BS 29AUG07

CHECK KPK 23 SEP 77

DRAWN SLB 16 SEPT 77

RASTER FO-52851-A

Downloaded from Elcodis.com electronic components distributor