MICRO SWITCH
a Honeywell Division
FED. MFG. CODE 91929

SWITCH-ENCLOSED

CATALOG LISTING
BFL1-AW1

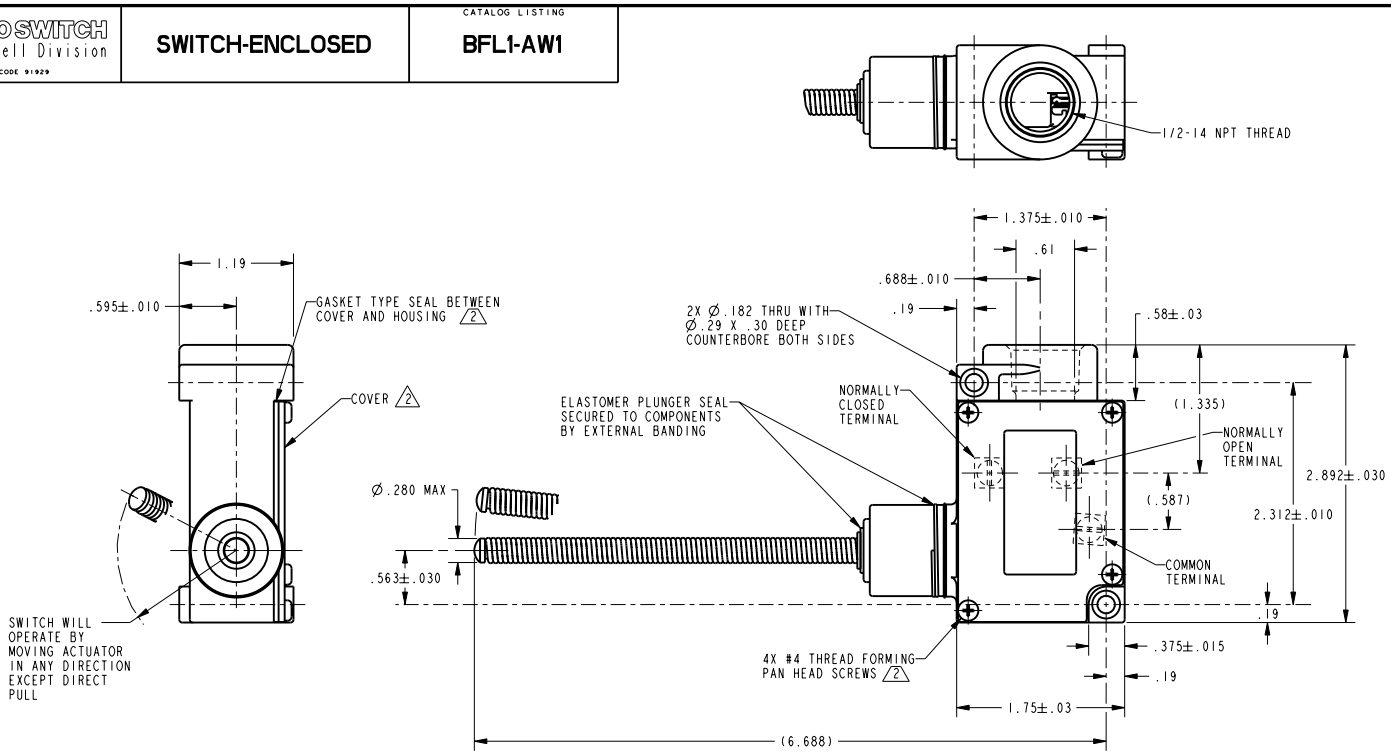

NOTES
1 - 3X 6-32 UNC PRESSURE PLATE TERMINAL SCREWS
2 FURNISHED UNASSEMBLED

THIS DRAWING COVERS A PROPRIETARY ITEM AND IS THE PROPERTY OF MICRO SWITCH. A DIVISION OF HONEYWELL. THIS DRAWING IS NOT TO BE COPIED OR USED WITHOUT THE APPROVAL OF MICRO SWITCH

THIRD ANGLE PROJECTION

CHARACTERISTICS	ELECTRICAL DATA	SCALE FULL
OPERATING POSITION: ..... 15° MAX	CONTACT ARRANGEMENT S P D T	DO NOT SCALE PRINT
OPERATING FORCE: ..... 7 OZ MAX	L162 5A 125, 250, 277 VAC	UNLESS OTHERWISE SPECIFIED TOLERANCES ARE
	1/10 HP 250 VAC	ONE PLACE (.0) ±.030
		TWO PLACE (.00) ±.015
		THREE PLACE (.000) ±.005
		ANGLES ±
		WEIGHT

ANSI Y14.5M-1982 APPLIES

CATALOG LISTING	BFL1-AW1	PAGE 1 OF 1	RELEASE NO. 203802
ISSUE	1		
REVISIONS			
CHECK			
CHECK	SAV	05SEP01	
CHECK			
DRAWN	TRF	05SEP01	
PTC/CAD	3D		

REPLACES

Downloaded from Elcodis.com electronic components distributor