**MICRO SWITCH**
a Honeywell Division
FED.MFG.CODE 91929

# SWITCH-BASIC

CATALOG LISTING
## BZ-2R55-A2-S

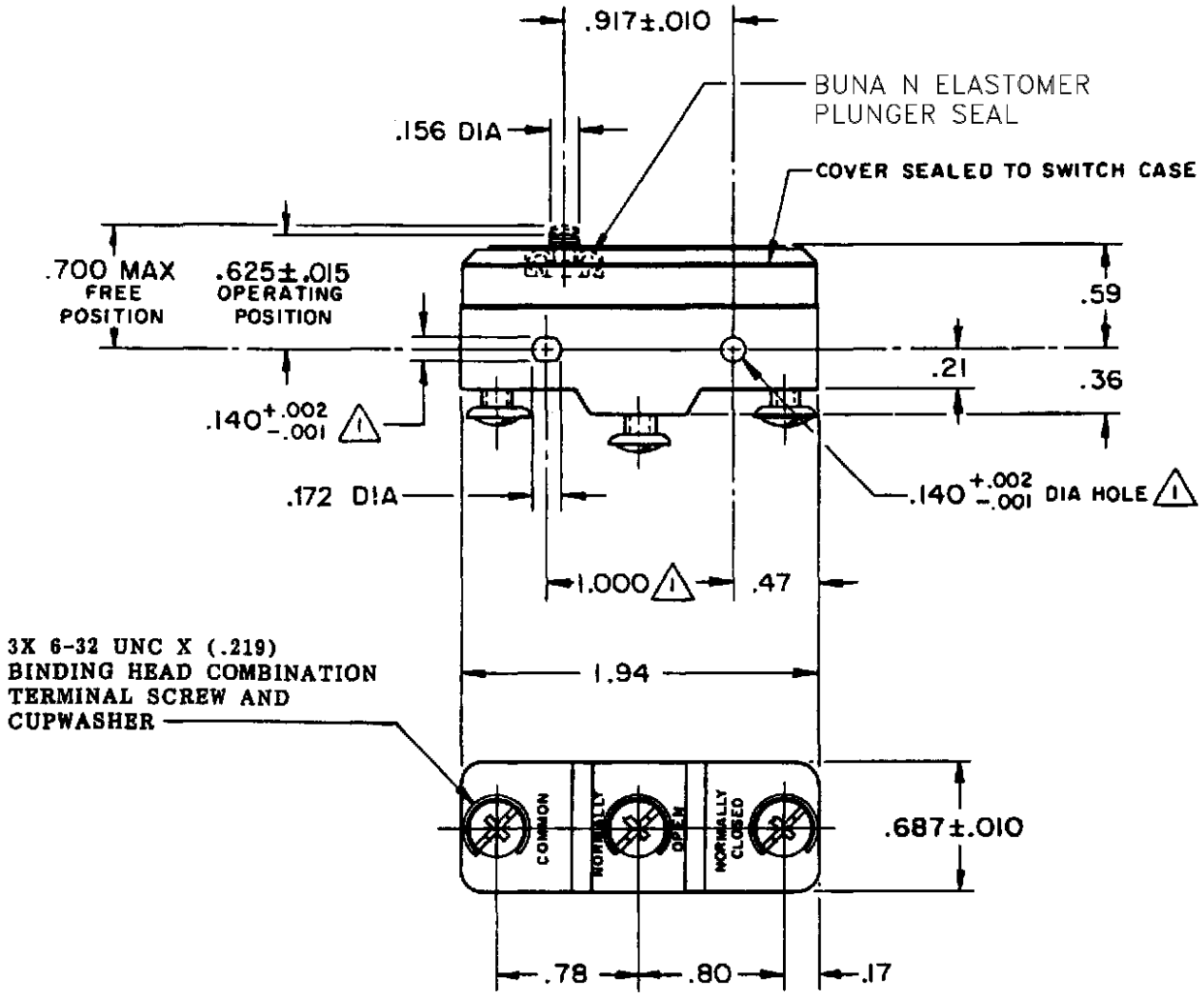


NOTE-
1. MOUNTING HOLES WILL ACCEPT PINS OR SCREWS OF .139 MAX DIA ON 1.000± .002 CENTERS
2 – SEALED CONSTRUCTION PROVIDES SPLASH RESISTANCE

THIS DRAWING COVERS A PROPRIETARY ITEM AND IS THE PROPERTY OF MICRO SWITCH, A DIVISION OF HONEYWELL. THIS DRAWING IS NOT TO BE COPIED OR USED WITHOUT THE APPROVAL OF MICRO SWITCH.

THIRD ANGLE PROJECTION

| CHARACTERISTICS | ELECTRICAL DATA | SCALE FULL / DO NOT SCALE PRINT |
|---|---|---|
| OPERATING FORCE — — — — — 9–15 OZ | CONTACT ARRANGEMENT | UNLESS OTHERWISE SPECIFIED TOLERANCES ARE |
| RELEASE FORCE — — — — — — 4 OZ MIN | L96<br>L288<br>L299<br>L306 15A-125, 250, OR 480 VAC<br>1/8 HP-125 VAC; 1/4 HP-250 VAC<br>1/2 A-125 VDC; 1/4 A-250 VDC<br>16A 250V~T85 5E4 | ONE PLACE (.0) ±.030 |
| DIFFERENTIAL TRAVEL — —.0004 – .0025 | | TWO PLACE (.00) ±.015 |
| OVERTRAVEL — — — — — — — .005 MIN | | THREE PLACE (.000) ±.005 |
| | | ANGLES ± |
| | | WEIGHT |

CATALOG LISTING BZ-2R55-A2-S PAGE 1 OF 1
ISSUE 6
REPLACES
RELEASE NO. PR-6725
CHECK
REVISIONS
A CO-93074 CCK 17 JUN 98
CHECK
17 JUN 98 JAF
CHECK
17 JUN 98 CCK
DRAWN
FORMTEK

Downloaded from Elcodis.com electronic components distributor