MICRO SWITCH
FREEPORT, ILLINOIS, U.S.A.
A DIVISION OF HONEYWELL
FED. MFG. CODE 91929

SWITCH - BASIC

CATALOG LISTING
BZ-2R-A2

AGM2000 / JG-05660

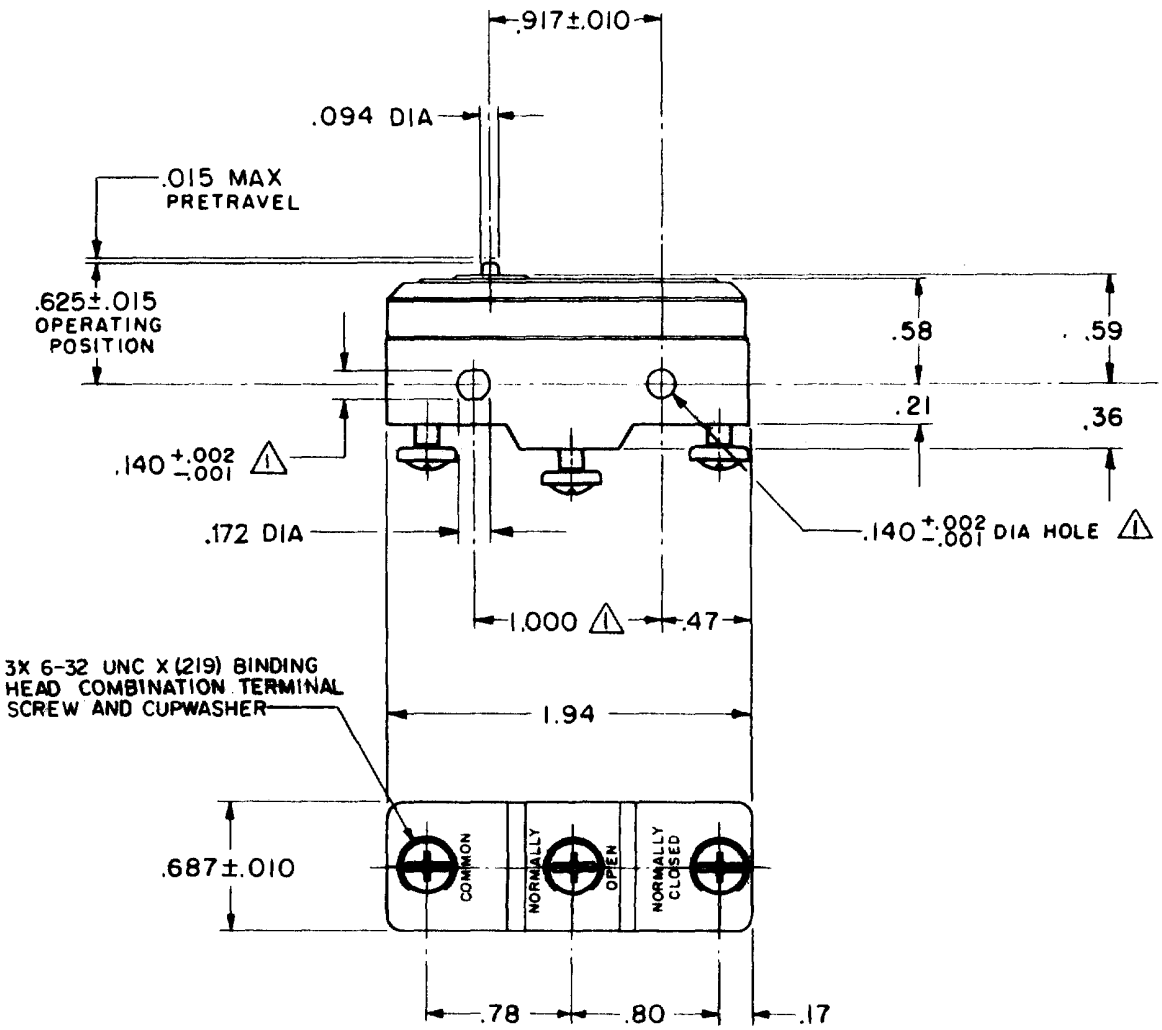

NOTE
1 – MOUNTING HOLES WILL ACCEPT PINS OR SCREWS OF .139 MAX DIA ON 1.000 ±.002 CENTERS

THIS DRAWING COVERS A PROPRIETARY ITEM AND IS THE PROPERTY OF MICRO SWITCH, A DIVISION OF MINNEAPOLIS-HONEYWELL REGULATOR CO. THIS DRAWING IS NOT TO BE COPIED OR USED WITHOUT THE APPROVAL OF MICRO SWITCH.

CHARACTERISTICS

OPERATING FORCE ---------9 - 13 OZ

RELEASE FORCE ----------4 OZ MIN

DIFFERENTIAL TRAVEL ---.0004 -.0020

OVERTRAVEL ----------.005 MIN

ELECTRICAL DATA

CONTACT ARRANGEMENT
S P D T

-L74- 15A-125, 250 OR 480 VAC, 2A-600 VAC
1/8HP-125 VAC; 1/4HP-250 VAC
1/2A-125 VDC; 1/4A-250 VDC

-L288-
-L306-
-L315-

CE EN EC 05

16A 250V ~ T85 5E4

SCALE FULL

DO NOT SCALE PRINT

UNLESS OTHERWISE NOTED
DIMENSIONS ARE IN INCHES

TOLERANCES ARE:

ONE PLACE	(.0)	±.030
TWO PLACE	(.00)	±.015
THREE PLACE	(.000)	±.005
ANGLES		±

WEIGHT .063 LB

BZ-2R-A2
PAGE 1 OF 1

M

DRAWING NUMBER 213

ISSUE

RELEASE NO.

REPLACES

CHECK

REVISIONS

A	CO 17410	G C H 12 APRIL 63	29 AUG 05
B	CO31092	R C R 22 OCT 72	
C	CO-73287-B	D H D 17 MAY 93	RJ
D	CO-77589	K D R 29 MAR 94	CHECK
E	C093346	D L T 1 SEP 98	
F	0015138	SPK 29 AUG 05	22 APR 63

L.S.D. CHECK

DRAWN G C H 12 APRIL 63

FORMTEK
FO-50378

Downloaded from Elcodis.com electronic components distributor