MICRO SWITCH
a Honeywell Division
FED.MFG.CODE 91929

MINIATURE PRECISION LIMIT SWITCH

CATALOG LISTING
914CE2-3A

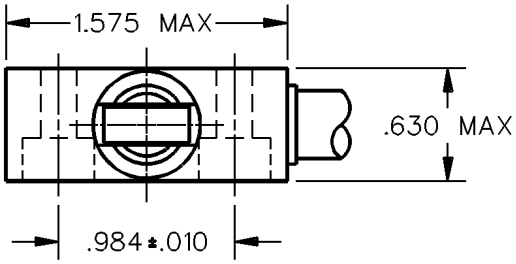

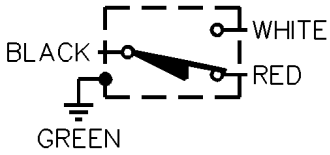

CIRCUIT DIAGRAM

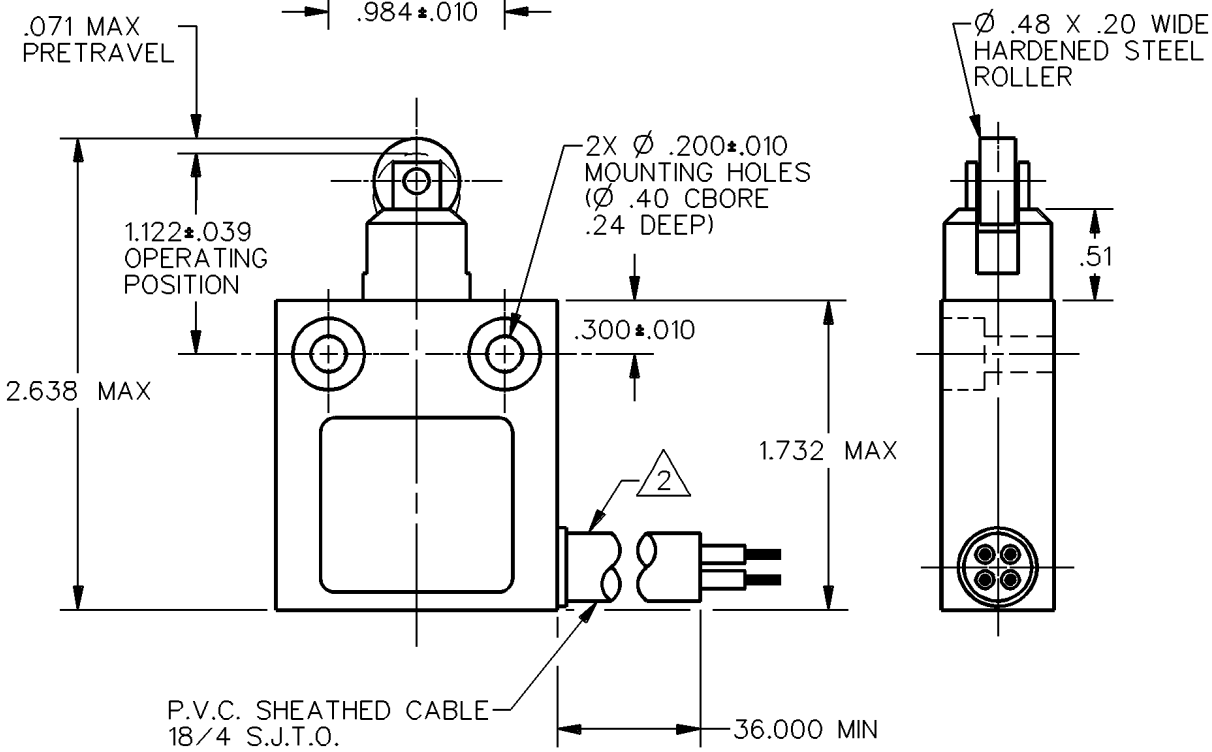

NOTES
1 – ZINC HOUSING FINISHED WITH GRAY PAINT
2 SIDE EXIT CABLE

ANSI Y14.5M-1982 APPLIES

THIS DRAWING COVERS A PROPRIETARY ITEM AND IS THE PROPERTY OF MICRO SWITCH, A DIVISION OF HONEYWELL. THIS DRAWING IS NOT TO BE COPIED OR USED WITHOUT THE APPROVAL OF MICRO SWITCH.

THIRD ANGLE PROJECTION

CHARACTERISTICS	ELECTRICAL DATA	SCALE FULL — DO NOT SCALE PRINT
OPERATING FORCE — — — 2.7 LB MAX	CONTACT ARRANGEMENT S P D T	UNLESS OTHERWISE SPECIFIED TOLERANCES ARE
RELEASE FORCE — — — — — 1 LB MAX		ONE PLACE (.0) ±.030
DIFFERENTIAL TRAVEL — — — .004 MAX	5A – 250 VAC 1/10HP – 125 OR 250 VAC	TWO PLACE (.00) ±.015
OVERTRAVEL — — — — — — .118 MIN		THREE PLACE (.000) ±.005
		ANGLES ±
		WEIGHT

914CE2-3A
RELEASE NO. CO-69061 REPLACES
DRAWING NUMBER
ISSUE 1
CHECK
REVISIONS
CHECK
CHECK
DRAWN S A V 10 OCT 91
DDM/CAD

Downloaded from Elcodis.com electronic components distributor