HONEYWELL PART NUMBER
91MCE1 SERIES CHART1

REV	DOCUMENT	CHANGED BY	CHECK
B	0033725	JA 13SEP07	PSR

91MCE1 NOMENCLATURE TREE

91MCE	1-	S	1	B	Q

Connector

Q	4-Pin M12 Connector

Modifications

B	Bottom Exit
P	Plastic Lever/Plastic Roller

Cable Length: (Side Exit)

1	1 Meter cable length
2	2 Meter cable length
3	3 Meter cable length
5	5 Meter cable length

Switch Type

P	1NO/1NC Direct Acting, Snap Action
S	1NC/1NO Direct Acting, Break-before-Make

Actuators

1	Pin Plunger

91MCE Series - Base
Miniature Compact Enclosed Switches

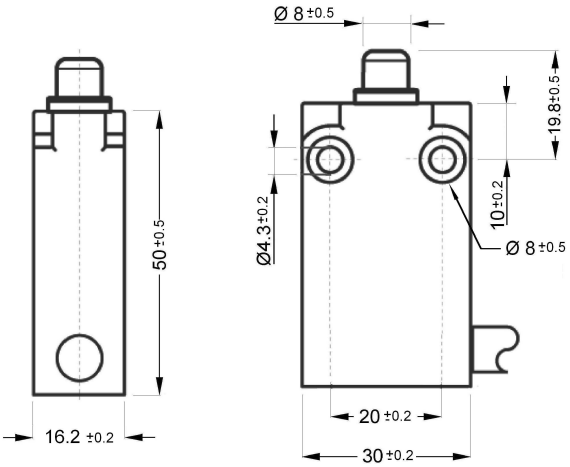

OPERATING CHARACTERISTICS

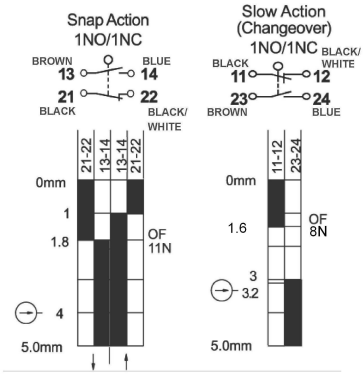

YELLOW/GREEN = GROUND

"Q" OPTION
PIN 1 & 2 - NORMALLY CLOSED
PIN 3 & 4 - NORMALLY OPEN

NOTES:

1. DIE CAST HOUSING FINISHED IN BLACK PAINT.

ELECTRICAL RATINGS

IEC 60947-5-1 / EN 90947-5-1				
Designation & Utilization Category	Rated operational current Ie (A) at rated operational voltage Ue		VA rating	
	120V	240V	Make	Break
AC15 A300	6	3	7200	720
	125VDC	250VDC		
DC13 Q300	0.55	0.27	69	69

SPECIFICATIONS

Operating Speed	0.05mm-1m/sec
Operating Frequency	Mechanical: 120ops/min Electrical: 30 ops/min
Insulation Resistance	>100MΩ@500V DC
Contact Resistance	<25mΩ
Rated Voltage	300V AC (EN60947-5-1)
Rated Thermal Current	Pre-leaded 10A- 3A Connector
Electrical Rating	AC15 A300 DC13 Q300
Dielectric Strength	1000VAC for 1 min between current carrying parts 2500VAC for 1 min between non-current carrying parts
Service Life	Mechanically 5 x10^7 (operations)
Operating Temperature	-25~+85°C without formation of ice
Humidity	< 95%RH
Cable	5 core, 0.75mm^2 (18AWG)
Degree of Protection	IP67

UNLESS OTHERWISE SPECIFIED TOLERANCES ARE +/- 0.15	APPROVALS

DESIGN UNITS: mm
TOLERANCES UNLESS NOTED:

NO PLACE	X	±	0.040
ONE PLACE	.X	±	0.030
TWO PLACE	.XX	±	0.015
THREE PLACE	.XXX	±	0.005
FOUR PLACE	.XXXX	±	0.0005
ANGLES		±	2°

THIRD ANGLE PROJECTION

DRAWN	BS	02APR07
CHECK	PSR	02APR07

THIS DRAWING COVERS A PROPRIETARY ITEM AND IS THE PROPERTY OF HONEYWELL. THIS DRAWING IS NOT TO BE COPIED OR USED WITHOUT THE PERMISSION OF HONEYWELL.

INTERPRET PER ASME Y14.5M-1994 OTHER HONEYWELL ENGINEERING STANDARDS MAY APPLY

RASTER

Honeywell

TITLE: COMPACT PRECISION LIMIT SWITCH

SIZE	TYPE	DRAWING NAME	REV
C	I	91MCE1 SERIES CHART1	B

SCALE – SHEET 1 OF 1

Downloaded from Elcodis.com electronic components distributor