MICRO SWITCH
FREEPORT, ILLINOIS, U.S.A.
A DIVISION OF HONEYWELL
FED. MFG. CODE 91929

SWITCH—BASIC

CATALOG LISTING
V3-129

CK-B2900

V3-129

DRAWING NUMBER: M

ISSUE: 2

REPLACES

RELEASE NO.

CHECK

REVISIONS

A	C020189	WEG 17 JUNE 65
B	C021900	OMW 13 OCT 66
C	C024941	MBS 3 DEC 68
D	C026075	MBS 26 AUG 69
E	C028095	MBS 9 NOV 70
F	C031748	LSD 4 APR 73
G	CO 59921	SMA 20 SEPT 86
H	C074476	KDR 21 APR 93

DRAWN WEG 17 JUNE 65

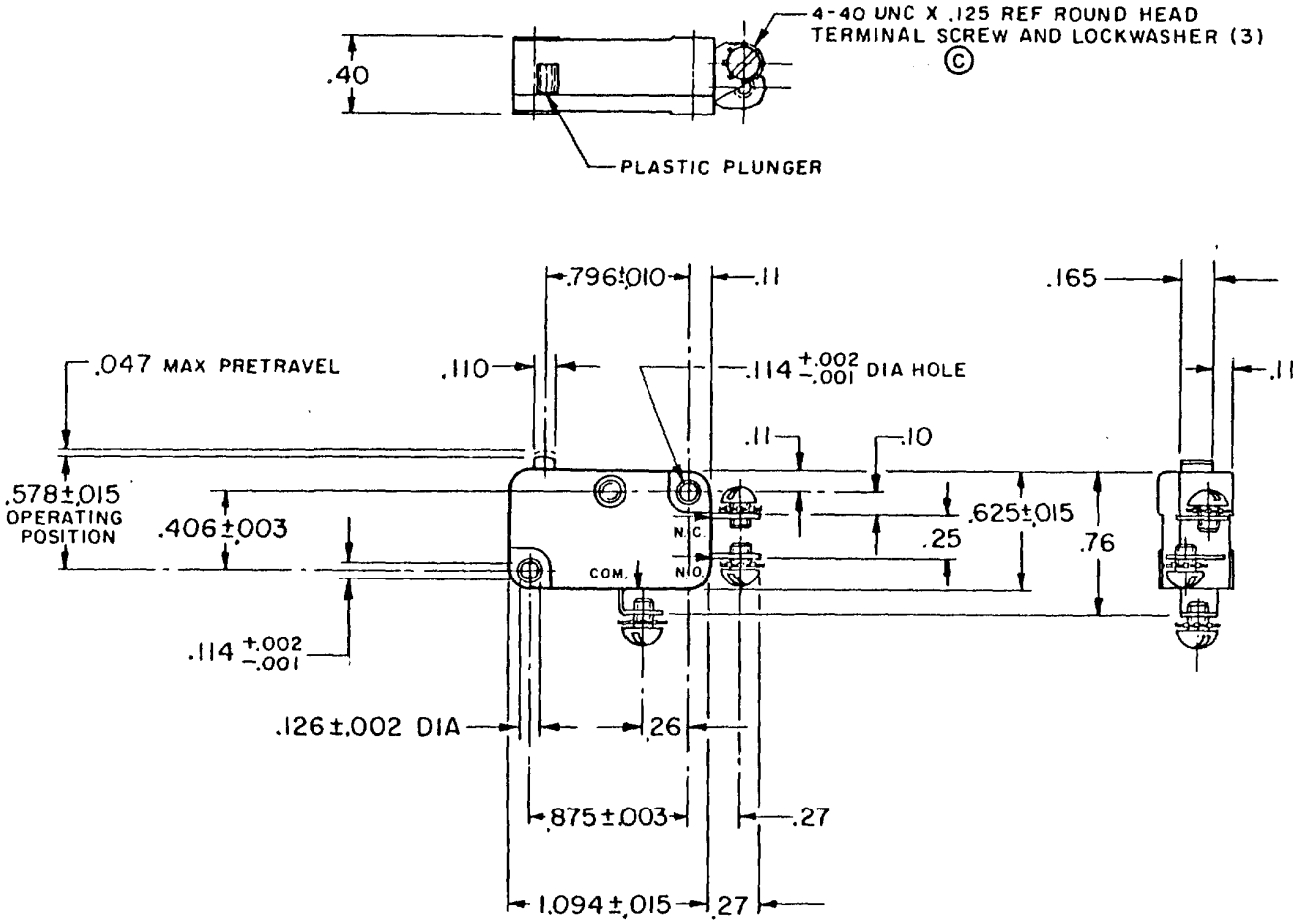

NOTE—
1—SWITCH MATERIAL WILL WITHSTAND TEMPERATURE OF 300° F

THIS DRAWING COVERS A PROPRIETARY ITEM AND IS THE PROPERTY OF MICRO SWITCH, A DIVISION OF HONEYWELL. THIS DRAWING IS NOT TO BE COPIED OR USED WITHOUT THE APPROVAL OF MICRO SWITCH.

CHARACTERISTICS

OPERATING FORCE — — — — — 8 OZ MAX

RELEASE FORCE — — — — — — 2 OZ MIN

DIFFERENTIAL TRAVEL — — — — .006 – .016

OVERTRAVEL — — — — — — — — .040 MIN

FREE POSITION — — — — — — — — .625 MAX

RELEASE TRAVEL — — — — — — — — .007 MIN

ELECTRICAL DATA

CONTACT ARRANGEMENT
S P D T

– L156 – 11A–1/3HP–125–250–277 VAC
1/2A–125 VDC; 1/4A–250 VDC
4A–125 VAC "L"

SCALE FULL

DO NOT SCALE PRINT

UNLESS OTHERWISE NOTED
DIMENSIONS ARE IN INCHES

TOLERANCES ARE

ONE PLACE	(.0)	±.1
TWO PLACE	(.00)	±.0
THREE PLACE	(.000)	±.0
ANGLES		±

WEIGHT .017 LB

Downloaded from Elcodis.com electronic components distributor