MICRO SWITCH
a Honeywell Division
FED. MFG. CODE 91929

SWITCH – BASIC

CATALOG LISTING
1DM21

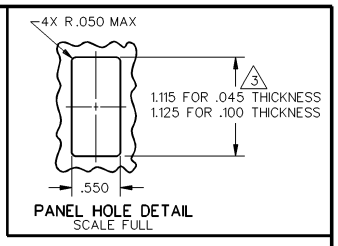

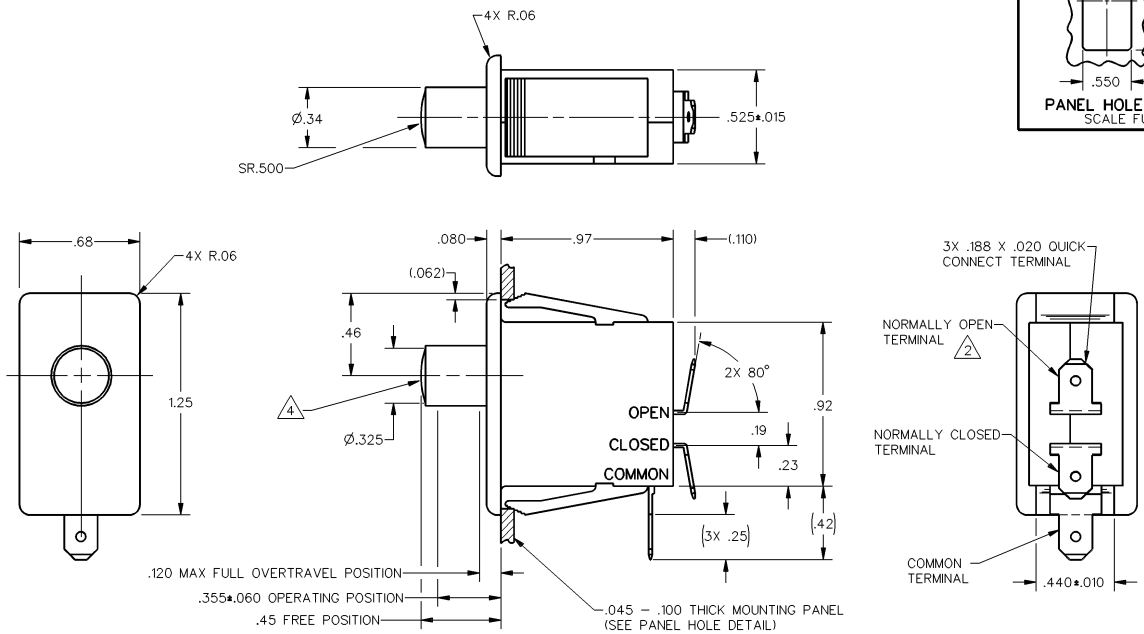

CATALOG LISTING 1DM21 | ISSUE M 6 | REPLACES | RELEASE NO. SR–11089

REVISIONS
A 00-22328 DHD 14 JUL 92

DDM/CAD | DRAWN DHD 14 JUL 92 | CHECK | CHECK | CHECK

THIS DRAWING COVERS A PROPRIETARY ITEM AND IS THE PROPERTY OF MICRO SWITCH. A DIVISION OF HONEYWELL. THIS DRAWING IS NOT TO BE COPIED OR USED WITHOUT THE APPROVAL OF MICRO SWITCH

THIRD ANGLE PROJECTION

SCALE 2 TO 1

DO NOT SCALE PRINT

CHARACTERISTICS

OPERATING FORCE – – – – – 15 OZ MAX

RELEASE FORCE– – – – – – – 3 OZ MIN

DIFFERENTIAL TRAVEL – – .045 APPROX

OVERTRAVEL – – – – – – – – – .235 MIN

PLUNGER FORCE AT .375 OVERTRAVEL 21 OZ MAX

ELECTRICAL DATA

CONTACT ARRANGEMENT
S P D T

L181
10A 1/2HP 125, 250 OR 277 VAC

UNLESS OTHERWISE SPECIFIED TOLERANCES ARE

ONE PLACE	(.0)	±.030
TWO PLACE	(.00)	±.015
THREE PLACE	(.000)	±.005
ANGLES		± 5°

WEIGHT

NOTES
1 – WHITE PLASTIC CASE AND PLUNGER
2 FLAG STYLE QUICK CONNECT RECEPTACLE REQUIRED FOR NORMALLY OPEN TERMINAL IF SWITCH IS WIRED BEFORE MOUNTING
3 NOMINAL CUTOUT DIMENSION FOR PANELS BETWEEN .045 AND .100 SHOULD BE INTERPOLATED BETWEEN 1.115 AND 1.125
4 PUSH TO OPERATE – MOMENTARY

ANSI Y14.5M–1982 APPLIES

Downloaded from Elcodis.com electronic components distributor