MICRO SWITCH
FREEPORT, ILLINOIS, U.S.A.
A DIVISION OF HONEYWELL
FED. MFG. CODE 91929

SWITCH-BASIC

CATALOG LISTING
BZ-3RQ1-A2
ALQ2500

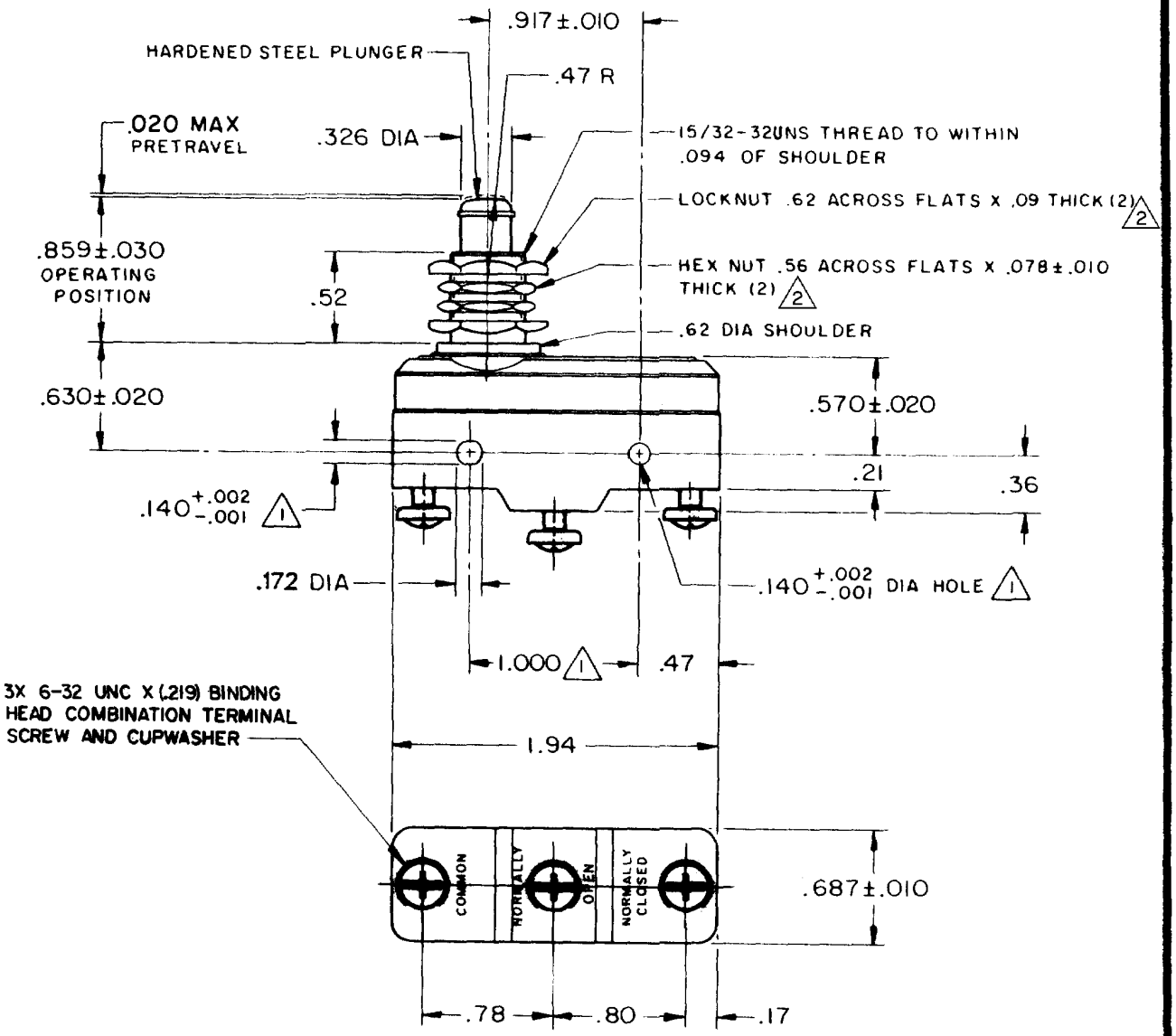

NOTES
1. MOUNTING HOLES WILL ACCEPT PINS OR SCREWS OF .139 MAX DIA ON 1.000+.002 CENTERS
2. HARDWARE FURNISHED UNASSEMBLED

THIS DRAWING COVERS A PROPRIETARY ITEM AND IS THE PROPERTY OF MICRO SWITCH, A DIVISION OF MINNEAPOLIS-HONEYWELL REGULATOR CO. THIS DRAWING IS NOT TO BE COPIED OR USED WITHOUT THE APPROVAL OF MICRO SWITCH.

CHARACTERISTICS

OPERATING FORCE	14 - 20 OZ
RELEASE FORCE	4 OZ MIN
DIFFERENTIAL TRAVEL	.0008-.0030
OVERTRAVEL	.219 MIN

ELECTRICAL DATA

CONTACT ARRANGEMENT
S P D T

-L96- 15 A-125, 250, OR 480 VAC
1/2 A-125 VDC; 1/4 A-250 VDC
1/8 HP-125 VAC, 1/4 HP-250 VAC

-L288-
-L306-
-L315-

CE EN 05 EC

16A 250V ~ T85 5E4

SCALE FULL
DO NOT SCALE PRINT

UNLESS OTHERWISE NOTED
DIMENSIONS ARE IN INCHES

TOLERANCES ARE:

ONE PLACE	(.0)	±.030
TWO PLACE	(.00)	±.015
THREE PLACE	(.000)	±.005
ANGLES		±

WEIGHT .094 LB

MBZ-3RQ1-A2
PAGE 1 OF 1

DRAWING NUMBER	RELEASE NO.	REPLACES
8		

ISSUE

REVISIONS			
A	C017410	G C H 22 MAY 63	
B	CO-73287-B	D H D 19 MAY 93	CHECK
C	CO-77569	K D R 29 MAR 94	23 AUG 05
D	CO-82133	CSL 25 JUL 96	RJ
E	C093346	D L T 11 SEP 98	CHECK
F	0015139	TSG 23 AUG 05	15 JUNE 63

L.S.D CHECK 22 MAY 63 DRAWN G C H

FORMTEK
FO-50376

Downloaded from Elcodis.com electronic components distributor