MICRO SWITCH
FREEPORT, ILLINOIS, U.S.A.
A DIVISION OF HONEYWELL
FED. MFG. CODE 91929

SWITCH—BASIC

CATALOG LISTING
BZ—2RQ

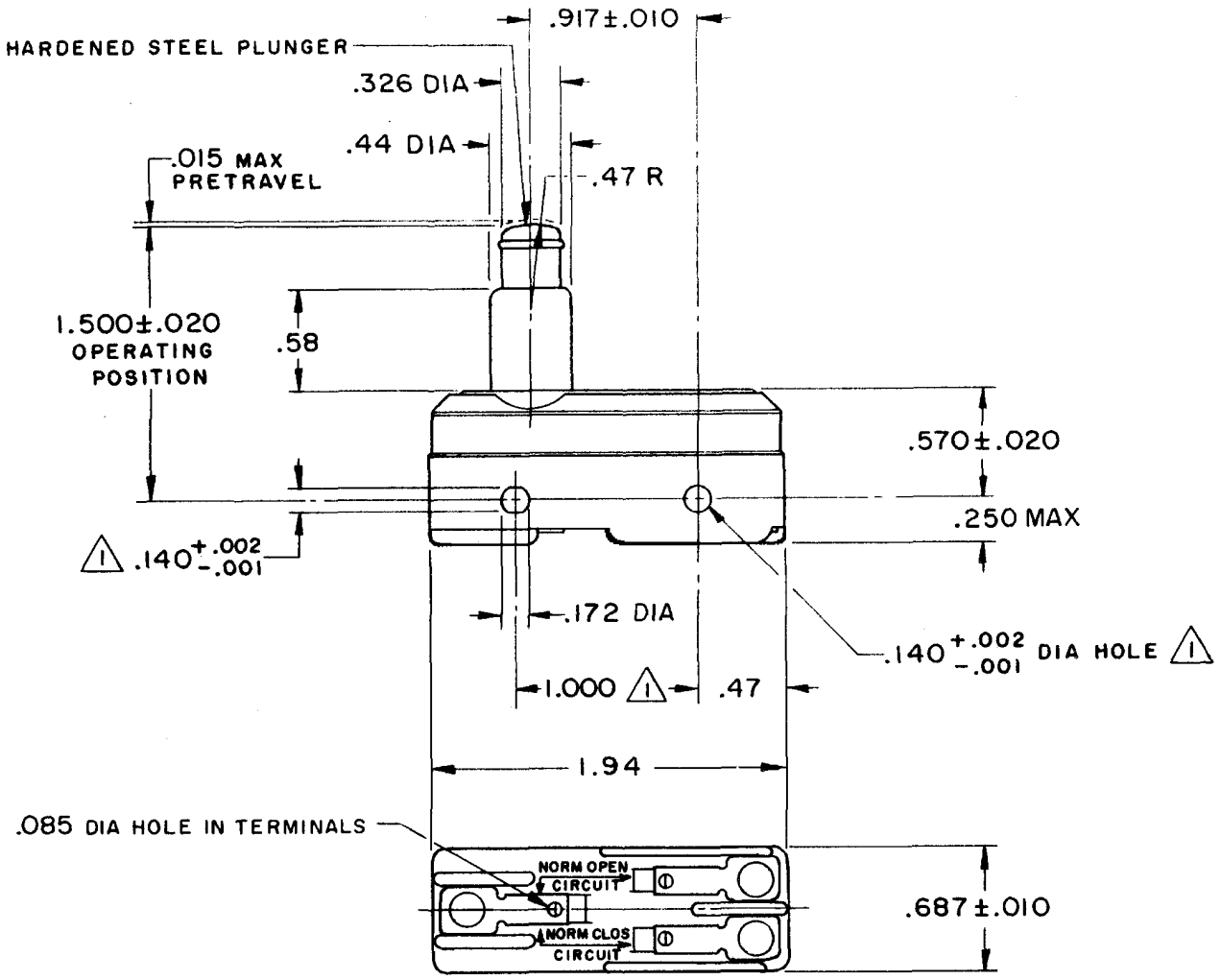

NOTE
1 - MOUNTING HOLES WILL ACCEPT PINS OR SCREWS OF .139 MAX DIA ON 1.000 ± .002 CENTERS

THIS DRAWING COVERS A PROPRIETARY ITEM AND IS THE PROPERTY OF MICRO SWITCH, A DIVISION OF MINNEAPOLIS-HONEYWELL REGULATOR CO. THIS DRAWING IS NOT TO BE COPIED OR USED WITHOUT THE APPROVAL OF MICRO SWITCH.

CHARACTERISTICS

OPERATING FORCE----------9 - 13 OZ

RELEASE FORCE----------4 OZ MIN

DIFFERENTIAL TRAVEL------.0004 - .0020

OVERTRAVEL----------.219 MIN

ELECTRICAL DATA

CONTACT ARRANGEMENT
S P D T

UNDERWRITERS' LAB. INC. LISTED RATING

-L96- 15 A - 125, 250, OR 480 VAC
1/2 A - 125 VDC ; 1/4 A - 250 VDC
1/8 HP - 125 VAC ; 1/4 HP - 250 VAC

-L288-
-L299-
-L306-
16A 250V ~ T85 5E4

SCALE FULL
DO NOT SCALE PRINT

UNLESS OTHERWISE NOTED
DIMENSIONS ARE IN INCHES
TOLERANCES ARE:

ONE PLACE	(.0)	±.030
TWO PLACE	(.00)	±.015
THREE PLACE	(.000)	±.005
ANGLES		±

WEIGHT .078 LB

DRAWING NUMBER BZ-2RQ PAGE 1 OF 1
ISSUE M 9
REPLACES
RELEASE NO.
CHECK

REVISIONS

A	CO17410	LEB 30 APR 63
B	CO46304	JAP 12 OCT 79
C	CO 58037	SMA 1 OCT 85
D	CO-78874	DLT 18 NOV 94
E	CO93346	DLT 10 SEP 98
F	CO-94212-J	JJA 5 OCT 99

CHECK LSD 1 MAY '63
CHECK LEB 30 APR 63
DRAWN
FORMTEK FO-50378

Downloaded from Elcodis.com electronic components distributor