CONVERSION CHART	
INCH	MM
.002	0,05
.010	0,25
.016	0,40
.020	0,50
.024	0,60
.035	0,88
.039	0,99
.059	1,49
.079	2,00
.090	2,28
.098	2,48
.115	2,92
.138	3,50
.157	3,98
.165	4,19
.167	4,24
.216	5,48
.270	6,85
.276	7,01
.344	8,73
.368	9,34
.400	10,16
.410	10,41
.472	11,98
.512	13,00
.905	22,98
.945	24,03

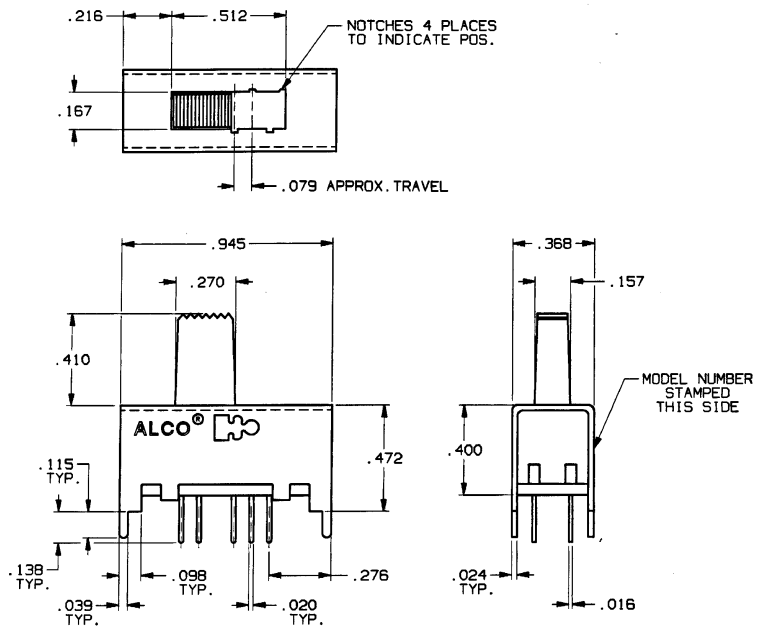

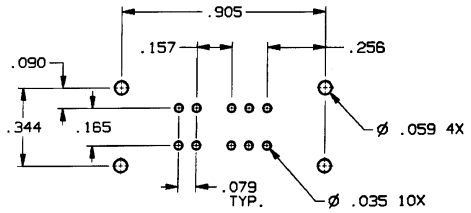

PC BOARD LAYOUT, TOP VIEW

RECOMMENDED TOLERANCES ±.002

SPECIFICATIONS:

MATERIALS:
CASE: COLD ROLLED STEEL.
ACTUATOR: POLYESTER, UL94V-0.
TERMINALS: GOLD OR SILVER PLATE.
TERMINAL SEAL: EPOXY.
CONTACTS, MOVING: COPPER ALLOY, GOLD OR SILVER PLATE.
CONTACTS, FIXED: COPPER ALLOY, GOLD OR SILVER PLATE.

ELECTRICAL:
CONTACT RATING, SILVER: 300 MA @ 125 VAC.
CONTACT RATING, GOLD: 0.4 VA MAX. @ 20 VDC OR PEAK AC.
INITIAL CONTACT RESISTANCE: 30 MILLIOHMS MAX.
INSULATION RESISTANCE: 1,000 MEGOHMS MIN.
DIELECTRIC STRENGTH: 500 VOLTS RMS @ SEA LEVEL.
LIFE EXPECTANCY: 15,000 CYCLES.

MECHANICAL:
ACTUATION FORCE: 600 ±300 GRAMS.
ACTUATOR TRAVEL: .079 IN.

ENVIRONMENTAL:
SOLDER HEAT RESISTANCE:
OPERATING TEMPERATURE: -4°F TO +185°F, (-20°C TO +85°C).
STORAGE TEMPERATURE: -40°F TO +212°F, (-40°C TO +100°C).

NOTES:
1. INTERPRET DRAWING PER ANSI Y14.5M 1982.

CIRCUIT DIAGRAM (TOP VIEW)

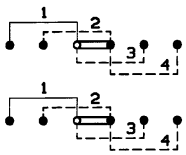

MODEL NO.	PLATING
MSSA-2450	SILVER
MSSA-2450G	GOLD

AUGAT D/N 40116-SD

THIS IS A C.A.D. GENERATED DRAWING. DO NOT MAKE MANUAL REVISIONS TO MASTER.

CUSTOMER DRAWING

SPECIFICATIONS ARE SUBJECT TO CHANGES WITHOUT NOTICE

THIRD ANGLE PROJECTION

TOLERANCES (EXCEPT AS NOTED)
ANGULAR = ±1°
DECIMAL .XXX = ±.010

AUGAT CONFIDENTIAL
This document contains information which is the exclusive property of Augat Inc. Distribution, reproduction or use by others is not permitted without the expressed written consent of Augat Inc.

UNLESS OTHERWISE SPECIFIED DIMENSIONS ARE IN MILLIMETERS. DO NOT SCALE PRINT

MATERIAL: SEE SPECIFICATIONS

FINISH: SEE SPECIFICATIONS

ORIGINAL DATE OF DRAWING: 9-23-96

DRAWN: C. THEODORE DATE: 9-23-96

CHECKED: DATE:

APPROVED: DATE:

CODE IDENT. NO. 91506 DWG. SIZE C

NEXT ASSY:

TYCO ELECTRONICS

TITLE: CUSTOMER DRAWING SLIDE SWITCH, DP 4 POS. (MSSA-2450 SERIES)

DWG. NO. 5-1437580-7 REV. A

PRODUCT CODE:

SCALE: SHEET 1 OF 1

REV	A
REVISIONS	0G3C-0173-02

CAD060992C

Downloaded from Elcodis.com electronic components distributor