SHEET OF

NOTES:
1. ALL DIMENSION IN MM [INCH]
2. GENERAL TOLERANCE: X.X=±0.4
   X.XX=±0.25
3. TERM. NOS. FOR REF. ONLY
4. CONTACT RATING SWITCHING: 150mA, 250V AC/DC
   350mA, 110V AC/DC
5. CONTACT RATING (NON-SWITCHING) 5A
6. OPERATING FORCE: 425±100 CM/STANDARD
7. OPERATING TEMP: -30° to 85°C
▲ 8. CIRCUIT SP: 4 POSITIONS, 90° INDEX.
9. DIELECTRIC STRENGTH 1000V RMS min.@ SEA LEVEL
▲10. DESIGNATE MAJOR DIMENSIONS
11. SUPPLIED LOCK NUT AND WASHER (NOT SHOWN).

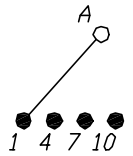

CONTACT CONFIGURATION
Timing: Non-Shorting

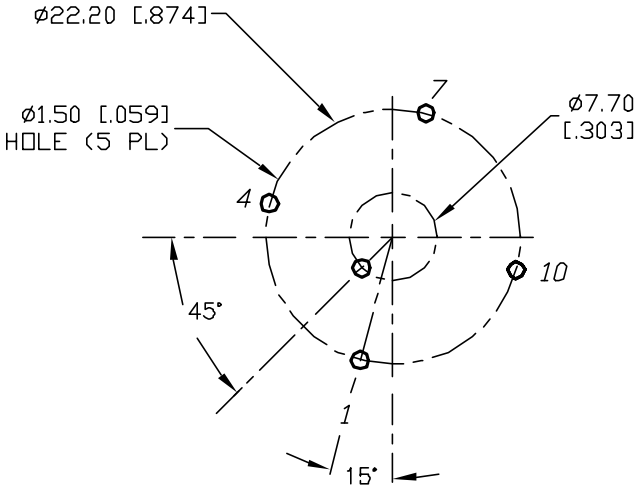

RECOMMENDED P.C.B. LAYOUT

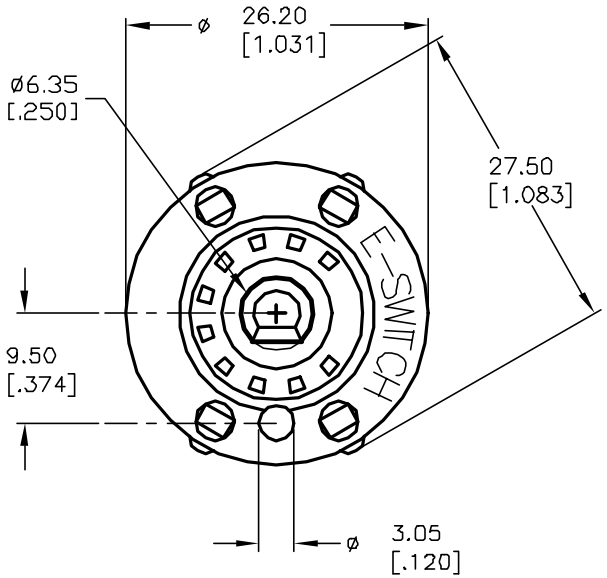

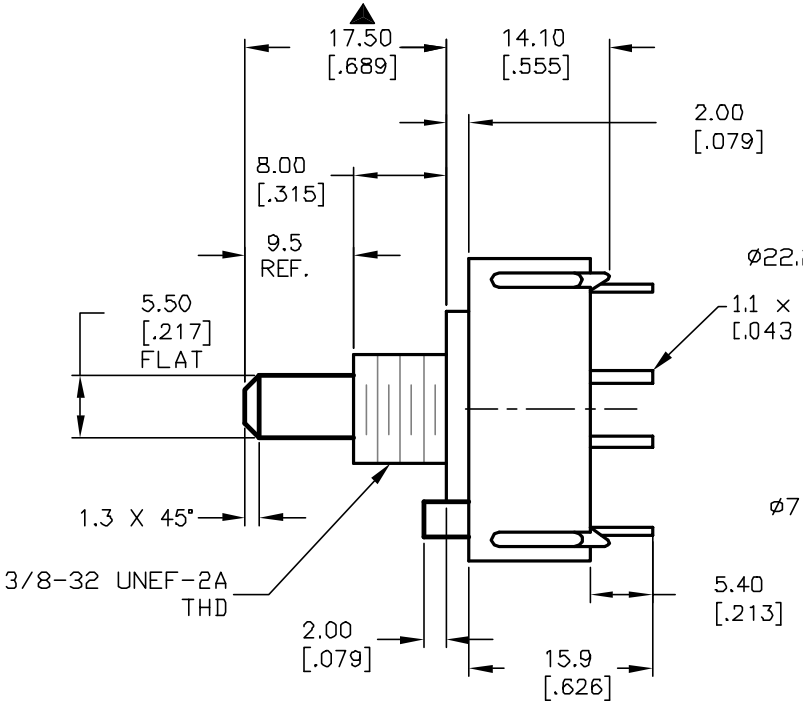

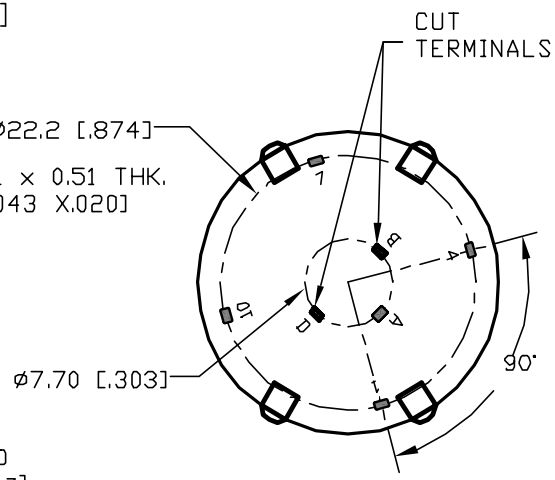

REV.	ECN No.	DESCRIPTION	DATE	CHKD
B	12434	REV DESC PER NEW CATALOG	9/19/02	CJB
A	11294	RELEASED FOR PRODUCTION	3/13/01	CJB

THE INFORMATION CONTAINED IN THIS DOCUMENT IS PROPRIETARY TO E-SWITCH AND IS NOT TO BE COPIED OR TRANSFERRED

E-SWITCH®

TITLE: KC-58-A (9.5mm)-01-N-P-S (NO STOPS)

SCALE	DATE	DR	DWG	REV
1.5:1	3/13/01	CJB	G510987	B

Downloaded from Elcodis.com electronic components distributor