SHEET OF

NOTES:

1. ALL DIMENSION IN MM [INCH]
2. GENERAL TOLERANCE: X.X=±0.4
   X.XX=±0.25
3. TERM. NOS. FOR REF. ONLY
4. CONTACT RATING SWITCHING: 150mA, 250V AC/DC
   350mA, 110V AC/DC
5. CONTACT RATING (NON-SWITCHING) 5A
6. CONTACT MATERIAL: SILVER over COPPER ALLOY.
7. OPERATING FORCE: 425±100 CM/STANDARD
8. OPERATING TEMP: -30° to 85°C
9. ▲ CIRCUIT SP: 5 POSITIONS, 30° INDEX.
10. DIELECTRIC STRENGTH 1000V RMS min.@ SEA LEVEL
11. ▲ DESIGNATE MAJOR DIMENSIONS
12. ▲ HARDWARE SUPPLIED ON SWITCH: LOCKRING, LOCKWASHER, HEXNUT.
13. 2002/95/EC (ROHS) COMPLIANT

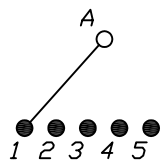

CONTACT CONFIGURATION
Timing: Non-Shorting (BBM)

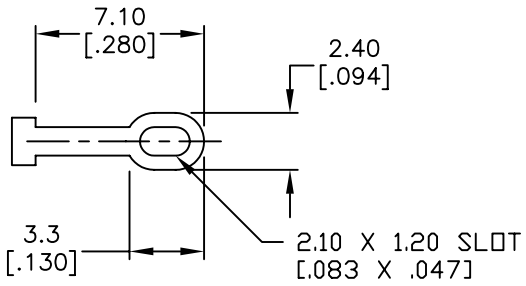

TERMINATION DETAIL
SCALE 2X

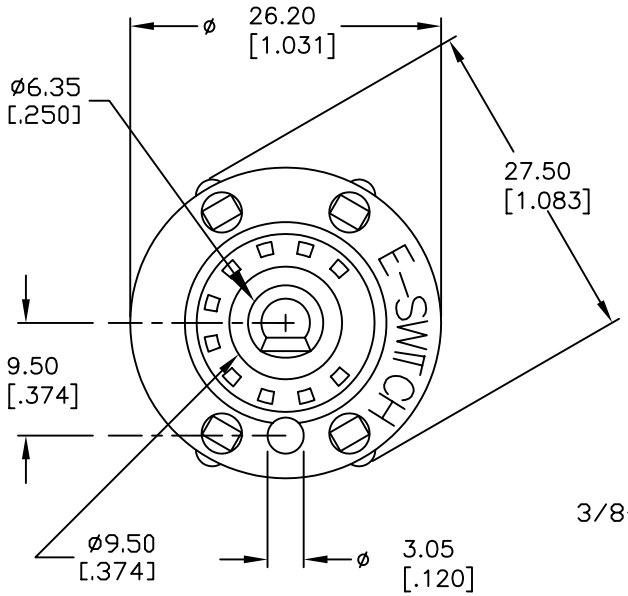

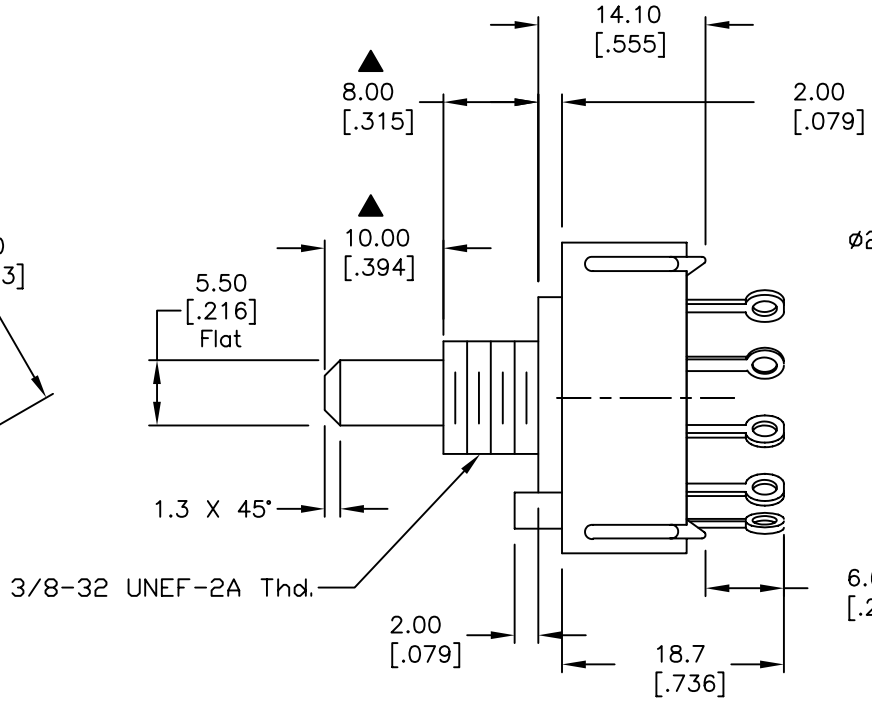

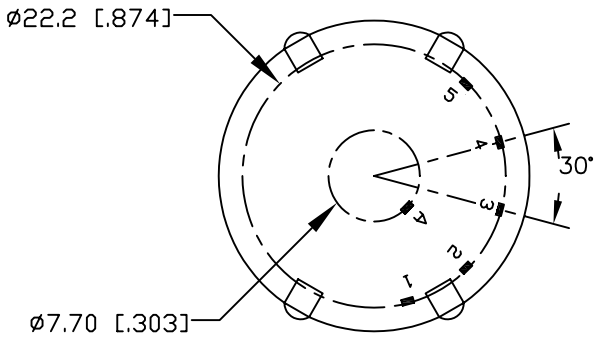

REV.	ECN No.	DESCRIPTION	DATE	CHKD
C	17314	FIXED NOTE 12, ADDED 13	5/21/07	TN
B	12222	REVISED ACTUATOR LENGTH	7/3/02	CJB
A	12222	RELEASED FOR PRODUCTION	6/12/02	CJB

THE INFORMATION CONTAINED IN THIS DOCUMENT IS PROPRIETARY TO E-SWITCH AND IS NOT TO BE COPIED OR TRANSFERRED

E-SWITCH™

TITLE	SCALE	DATE	DR	DWG	REV
KC15A10.001NLS	1.5:1	5/21/07	TN	G527539	C

Downloaded from Elcodis.com electronic components distributor