THIS DRAWING IS UNPUBLISHED. RELEASED FOR PUBLICATION
© COPYRIGHT – BY TYCO ELECTRONICS CORPORATION. ALL RIGHTS RESERVED.

LOC	DIST	REVISIONS				
AD	00	P	LTR	DESCRIPTION	DATE	DWN	APVD
			A	ECO 05 016593	22MAY06	BSV	–

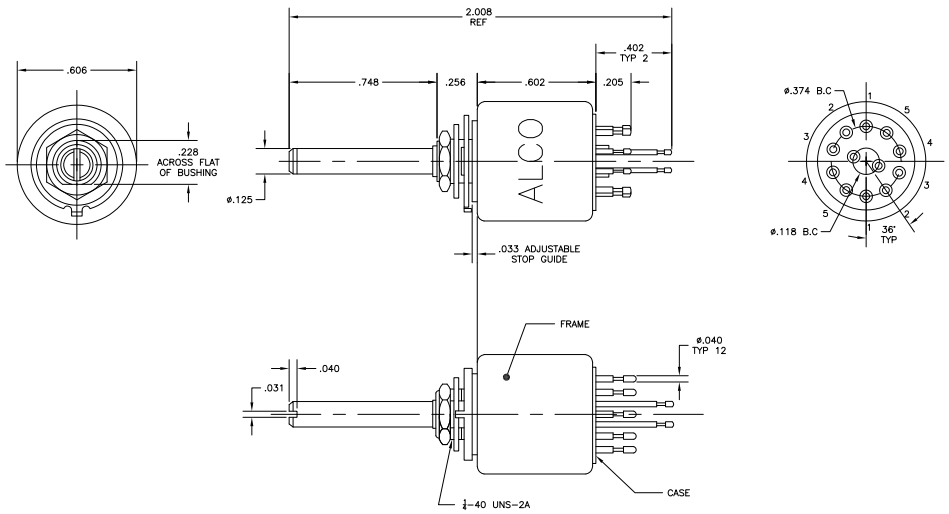

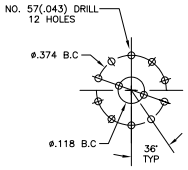

P.C MOUNTING DIMENSIONS

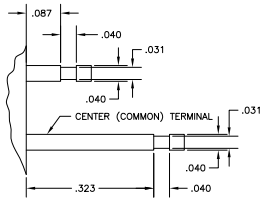

TYPICAL TERMINAL DETAIL

NOTES:
1. ALL MATERIALS AND FINISHES SHALL COMPLY WITH EU DIRECTIVE 2002 /95/EC OF 27JAN2003(RoHS).
2. CONTACT TIMING IS NON-SORTING.

MATERIALS		
COMPONENT NAME	BASE MATERIAL	FINISH
ROTOR	BRASS	NICKEL
ROTOR	EVOH RESIN, NATURAL, UL94HB	
CASE	DAP, GREEN, UL94V-0	
ACTUATOR TIP	POLYAMIDE, NATURAL, UL94HB	
FRAME	ALUMINIUM	
MOUNTING SLEEVE	ZINC ALLOY	ZINC
SHAFT	BRASS	NICKEL
SPRING	MUSIC WIRE	OIL TREATED
CONTACT SPRING	MUSIC WIRE	OIL TREATED
COMMON	SILVER	
STOP RING	SPRING STEEL	ZINC
STOPPER	STEEL	ZINC
HEX.NUT	BRASS	NICKEL
LOCATING RING	STEEL	ZINC
LOCK WASHER	STEEL	ZINC
MOVABLE CONTACT ARM	SILVER	GOLD
COMMON TERMINAL	BRASS	GOLD
CONTACTS	AgCuZn ALLOY	GOLD OVER NICKEL
STEEL BALL	STEEL	
LABEL	TETRON FILM	

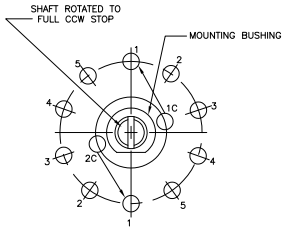

DIAGRAM LOOKING AT SHAFT END

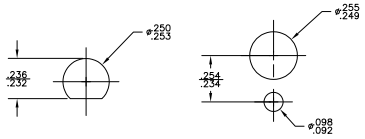

RECOMMONDED PANEL CUTOUTS
TO PREVENT ROTATION

SPECIFICATIONS	
RATING	.5A @ 125VAC OR 28VDC, RESISTIVE
INITIAL CONTACT RESISTANCE	10 milliohms MAX @ 1A, 2-4 VDC
INITIAL INSULATION RESISTANCE	100 megaohms min, TERMINAL TO TERMINAL AND TERMINAL TO FRAME
INITIAL DIELECTRIC WITHSTANDING VOLTAGE	1000 VAC, (50-60HZ) FOR 1 min BETWEEN TERMINAL AND GROUND
DURABILITY	10,000 cycles min AT RATED CURRENT, 5-10 cycles per min
OPERATING FORCE	14 IN OZ MAX. TORQUE

MRC25S04	1825498-1
ALCO P/N	TYCO P/N

THIS DRAWING IS A CONTROLLED DOCUMENT.

DIMENSIONS: INCHES
TOLERANCES UNLESS OTHERWISE SPECIFIED: 0 PLC ± – 1 PLC ± – 2 PLC ± – 3 PLC ± – 4 PLC ± – ANGLES ± –
MATERIAL: SEE TABLE
FINISH: SEE TABLE

DWN: B.S. VISWESWARA 22MAY06
CHK: –
APVD: –
PRODUCT SPEC: –
APPLICATION SPEC: –
WEIGHT: –
CUSTOMER DRAWING

Tyco Electronics Corporation
Harrisburg, Pa 17105-3608

NAME: ROTARY SWITCH, WITH KNOB
2 POLE, 2-5 POSITIONS, ADJUSTABLE

SIZE: A1 | CAGE CODE: 00779 | DRAWING NO: C-1825498 | RESTRICTED TO: –
SCALE: 4:1 | SHEET 1 OF 1 | REV: A

Downloaded from Elcodis.com electronic components distributor