SHEET OF

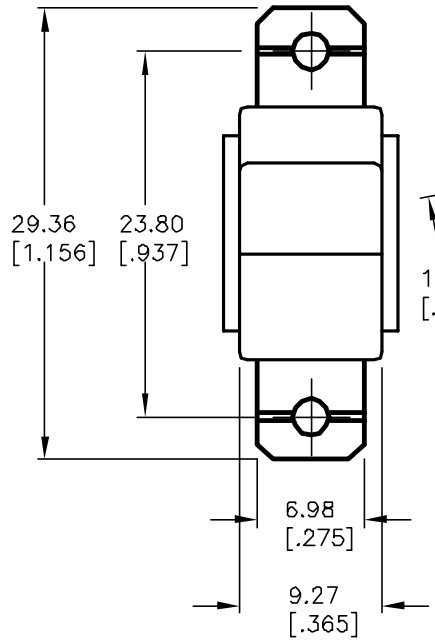

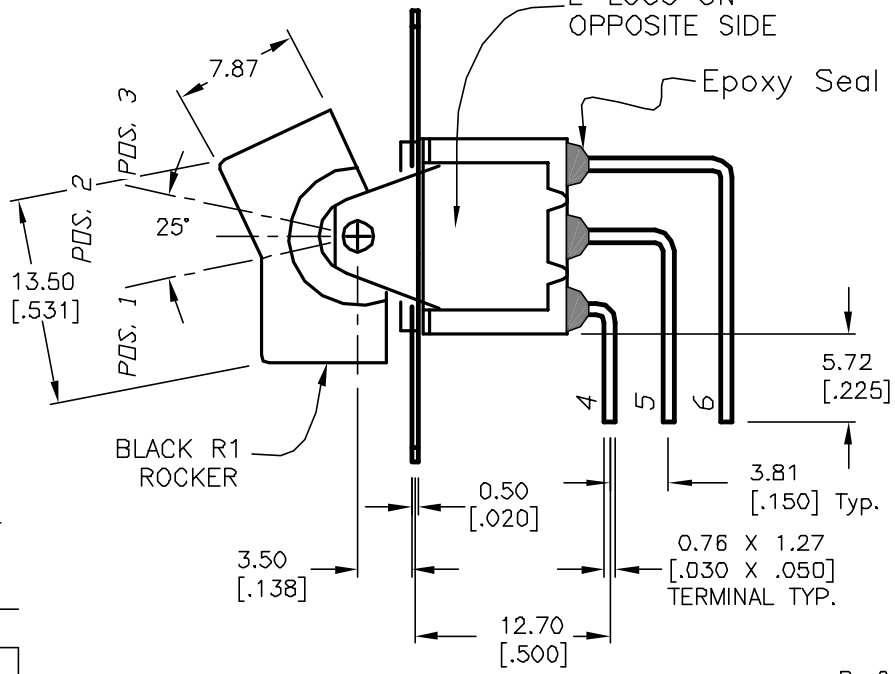

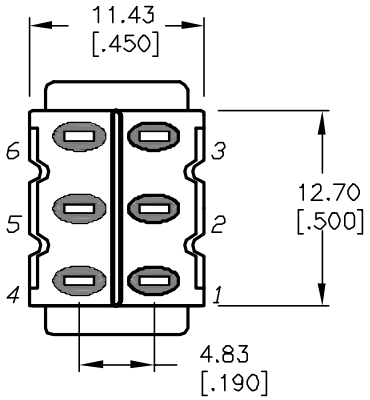

BOTTOM VIEW
BRACKET CROPPED
FOR CLARITY

SWITCH FUNCTION		
POS. 1	POS. 2	POS. 3
ON	NONE	ON
2-3, 5-6	OPEN	2-1, 5-4

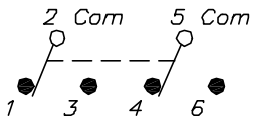

CIRCUIT: 2PDT

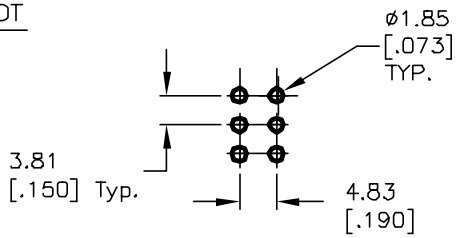

RECOMMENDED P.C.B. LAYOUT
NOT TO SCALE

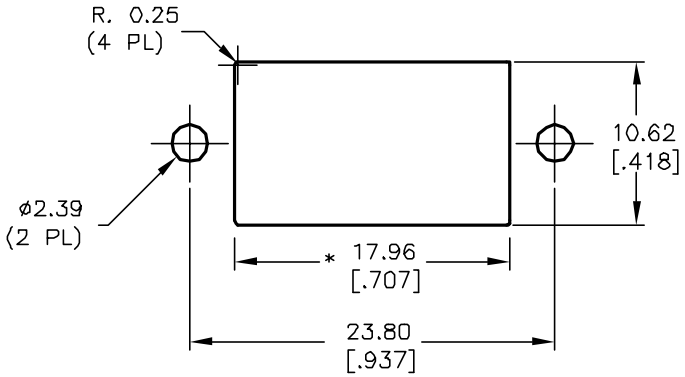

RECOMMENDED PANEL MOUNTING

PANEL THICKNESS

* DIMENSION IS 15.75/15.88
▲ FOR PANEL THICKNESS BETWEEN
1.52mm TO 3.18mm

NOTES:

1. ALL DIMENSIONS IN MM [INCH]
2. GENERAL TOLERANCE: X.X=±0.4
   X.XX=±0.25
3. TERM. NOS. FOR REF. ONLY
4. RATING: 5A @120VAC or 28VDC;
   2A @250V.
5. MATERIAL: FIXED TERMINAL & MOVING CONTACT
   Copper Alloy w/Silver plate
6. CONTACT RESISTANCE: 10mILLI Ohms max initial
   @2-4VDC, 100mA for AG & AU
7. ELECTRICAL LIFE: 50,000 make-and-break
   cycles at full load.
8. INSULATION RESISTANCE: 1,000M ohm min.
9. DIELECTRIC STRENGTH: 1000V RMS @sea level
10. OPERATING TEMP.: -30°C to 85°C

REV.	ECN No.	DESCRIPTION	DATE	CHKD
A	12315	RELEASED	7/17/02	CJB

THE INFORMATION CONTAINED IN THIS DOCUMENT
IS PROPRIETARY TO E-SWITCH AND IS
NOT TO BE COPIED OR TRANSFERRED

E-SWITCH®

TITLE 300 DP-1 (R1 BLK) M7 QE
SPECIAL PANEL MOUNT/ANGLED TERMINATION

SCALE	DATE	DR	DWG	REV
2:1	7/17/02	CJB	T321061	A

Downloaded from Elcodis.com electronic components distributor