SHEET OF

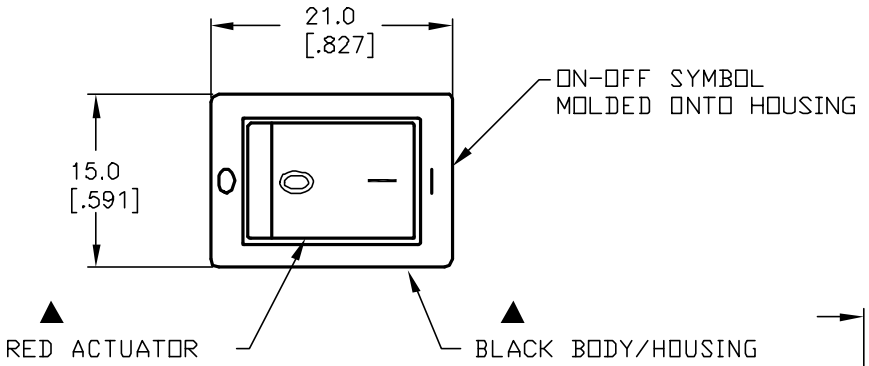

INCANDESCENT BULB

PARAMETERS	SYMBOL	MAX.	UNITS
LAMP VOLTAGE (AC/DC)	V	24	V
POWER DISSIPATION	P_D	2	Watts
CURRENT	I	50	mA

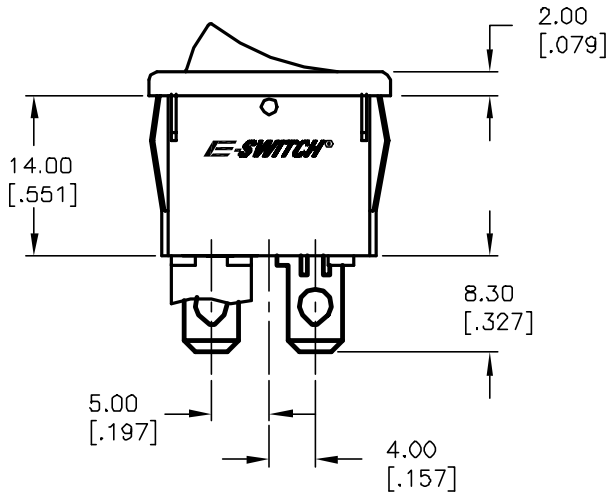

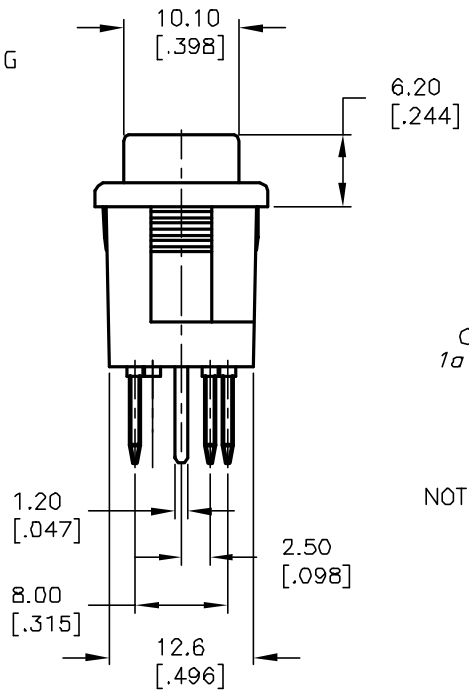

PANEL THICKNESS	X dimension
0.75-1.25 [.030-.049]	19.2-0.1 [.756]
1.25-2.0 [.049-.079]	19.4-0.1 [.764]
2.0-3.0 [.079-.118]	19.8-0.1 [.780]

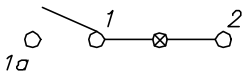

(ILLUMINATED)

CIRCUIT: SPST

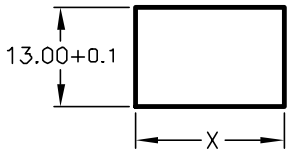

PANEL CUTOUT
NOT TO SCALE

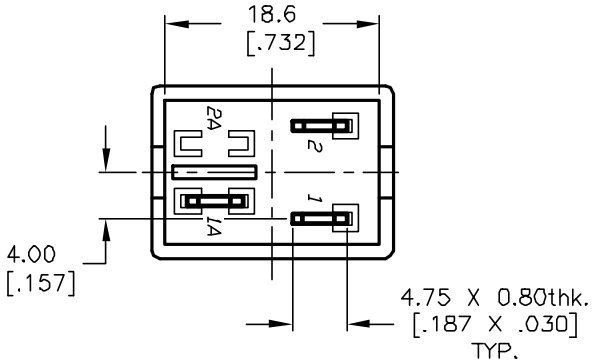

NOTES:

1. ALL DIMENSIONS IN MM [INCH]
2. GENERAL TOLERANCE: X.X=±0.4
   X.XX=±0.25
3. RATING:
   6A @250VAC;9A @125VAC (UL, CSA, VDE)
   4(1)A @250VAC
4. LAMP VOLTAGE: 24VDC (Incandescent BULB)
5. MATERIAL:
   CONTACT SURFACE: Coin Silver, Silver Plate
   TERMINAL: Copper Alloy W/ Silver Plate.
6. CONTACT RESISTANCE: 20mILLIOHMS TYP. INITIAL
7. INSULATION RESISTANCE: 1000MegaOHMS
8. DIELECTRICAL STRENGTHS >1500V RMS min. @SEA LEVEL
   >3000V RMS @SEA LEVEL
9. MECHANICAL LIFE: 50,000 CYCLES.
10. ELECTRICAL LIFE: 10,000 CYCLES.

REV.	ECN No.	DESCRIPTION	DATE	CHKD
A	11692	RELEASED FOR PRODUCTION	10/01/01	CJB

THE INFORMATION CONTAINED IN THIS DOCUMENT IS PROPRIETARY TO E-SWITCH AND IS NOT TO BE COPIED OR TRANSFERRED

E-SWITCH®

TITLE R1973A BLK RED FF4

SCALE	DATE	DR	DWG	REV
1.5:1	10/01/01	CJB	M400063	A

Downloaded from Elcodis.com electronic components distributor