DIMENSIONS IN INCHES (MILLIMETERS)
DO NOT SCALE DRAWING .....

Dwg No. NAA-111-BI11-00

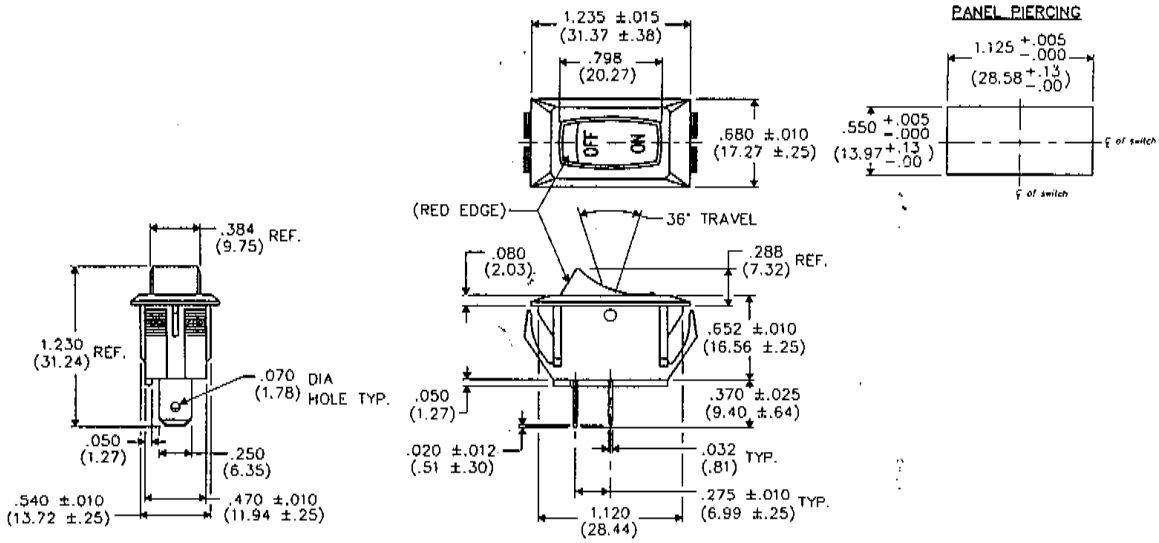

REVISIONS		
0	RELEASED. DGW 6-28-2001	JUL 3 2001

FORM-84

CW INDUSTRIES
Southampton, Pa. 18966

TOLERANCES UNLESS OTHERWISE SPECIFIED
2 Place Decimal ±.010
3 Place Decimal ±.005
Angles ..... ±1°
METRIC
1 Place Dec ± .25mm
2 Place Dec ± .13mm

Made for: CW IND.
Drawn by: DGW 6-28-2001
Checked by: G Guld 7-3-01
Approval: [illegible] 7-3-01

Title: INDICON UNIBODY SWITCH ASSEMBLY 1.125"x .550" PANEL

Division: SWITCH

Dwg No. NAA-111-BI11-00

Downloaded from Elcodis.com electronic components distributor