SHEET OF

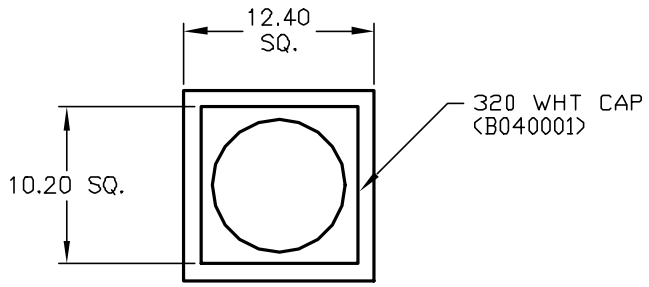

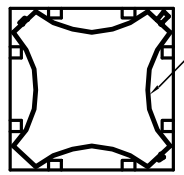

SHOWN CAP REMOVED

TOP VIEW -SHOW ORIENTATION OF LEGENDS IN RESPECT TO THE PCB PIN TERMINALS.

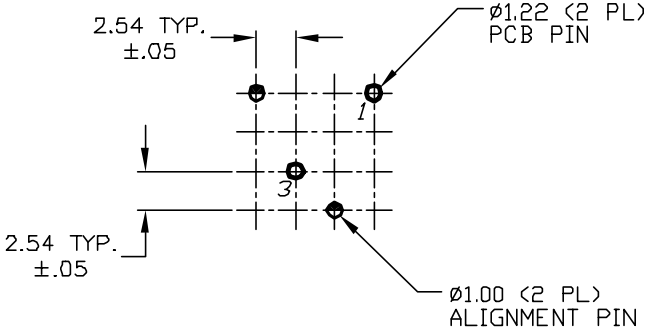

RECOMMENDED P.C.B. LAYOUT

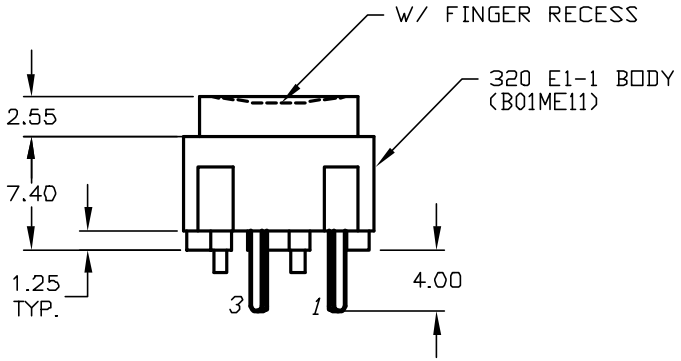

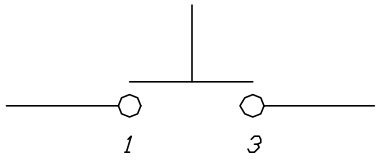

CIRCUIT: SPST
CONTACT CONFIGURATION

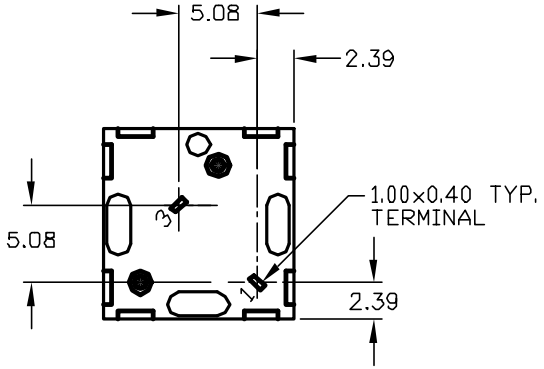

NOTES:
1. ALL DIMINSIONS IN MM
2. GENERAL TOLERANCE: X.X=±0.4
   X.XX=±0.25
3. TERMINAL NO'S FOR REFERENCE ONLY.
4. RATING: 25mA, @50VDC
5. OPERATING FORCE: 120gF
6. TRAVEL TO MAKE: 0.7mm

REV.	ECN No.	DESCRIPTION	DATE	CHKD
A	11867	RELEASED FOR PRODUCTION	12/17/01	CJB

THE INFORMATION CONTAINED IN THIS DOCUMENT IS PROPRIETARY TO E-SWITCH AND IS NOT TO BE COPIED OR TRANSFERRED

E-SWITCH®

TITLE 320 E1-1 WHT

SCALE	DATE	DR	DWG	REV
2:1	12/17/01	CJB	XB0099P	A

Downloaded from Elcodis.com electronic components distributor