Downloaded from Elcodis.com electronic components distributor

SHEET 1 OF 1

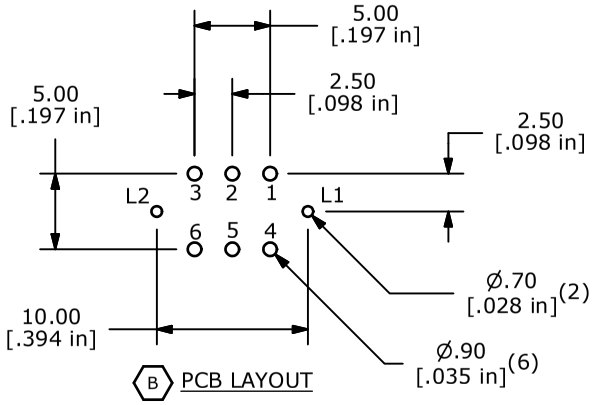

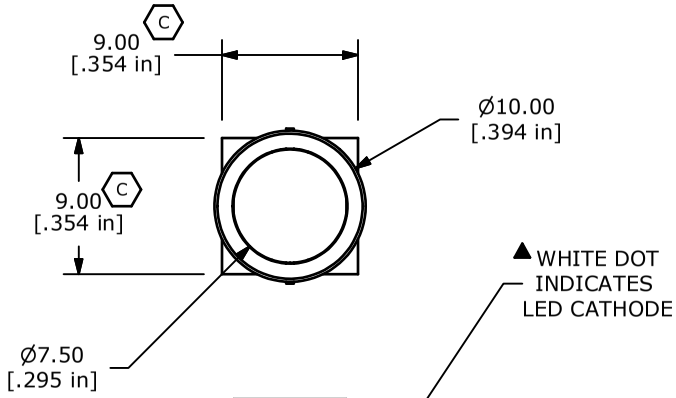

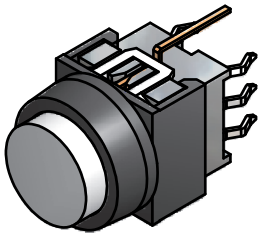

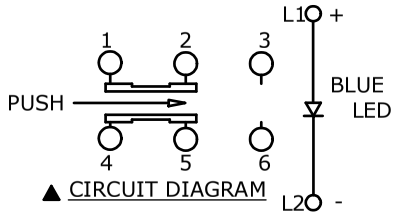

▲ CIRCUIT DIAGRAM

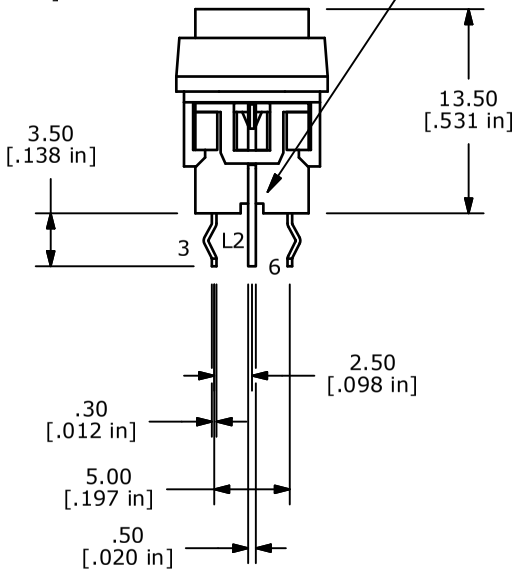

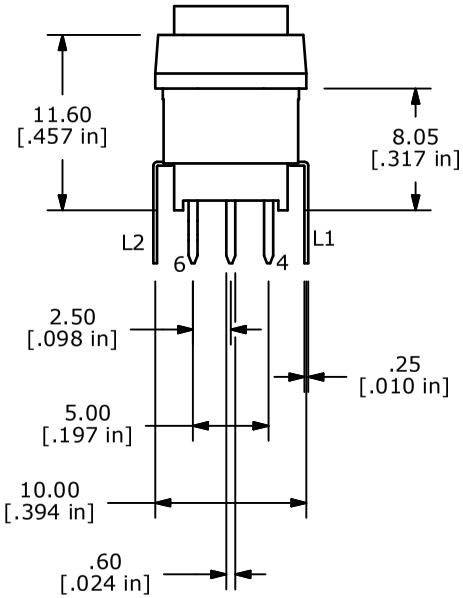

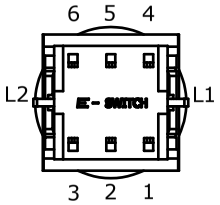

NOTES:
1. ALL DIMENSIONS IN MM [INCH]
2. GENERAL TOLERANCE: X.X=±0.4
   X.XX=±0.25
3. TERMINAL NUMBERS FOR REF ONLY
4. CONTACT RATING: CURRENT: 100mA
   VOLTAGE: 30 VDC
5. OPERATING LIFE: 50,000 MAKE-AND-BREAK CYCLES
6. INSULATION RESISTANCE: 500VDC, 100M OHM. MIN.
7. OPERATING FORCE: 250gf ± 100 GRAMS
8. OPERATING TEMP.: -20°C to 70°C
▲ 9. TRAVEL: MOMENTARY
   1.50 ± 0.3mm FULL TRAVEL
10. CONTACT RESISTANCE: 50 m OHM. MAX.
11. ▲ DENOTES CRITICAL PARAMETER.
12. 2002/95/EC (ROHS) COMPLIANT
▲13. LED COLOR: BLUE

LED SPECS	UNITS	BLUE
FORWARD CURRENT	mA	5
FORWARD VOLTAGE @20mA	V	2.9-4.0
LUMINOUS INTENSITY @ 10mA	MCD	9 @ 5mA

REV	PCR NO	DESCRIPTION	DATE	BY
C	19602	DRAWING UPDATE	1/19/11	BGL
B	18414	PCB LAYOUT SECTION FIXED	2/19/09	BLR
A	18361	RELEASE FOR PRODUCTION	12/22/08	BLR

THE INFORMATION CONTAINED IN THIS DOCUMENT IS PROPRIETARY TO E-SWITCH AND IS NOT TO BE COPIED OR TRANSFERRED

E-SWITCH™

TITLE LP4OA1PBBTB

SCALE	DATE	DR	DWG	REV
2 = 1	2/19/2009	BLR	B240016	C