Converter - Brake - Inverter Module (CBI 1)
NPT IGBT

Three Phase Rectifier	Brake Chopper	Three Phase Inverter
V_{RRM} = 1600 V	V_{CES} = 600 V	V_{CES} = 600 V
I_{DAVM25} = 130 A	I_{C25} = 25 A	I_{C25} = 42 A
I_{FSM} = 320 A	$V_{CE(sat)}$ = 2.0 V	$V_{CE(sat)}$ = 2.3 V

Preliminary data

Part name (Marking on product)

MUBW35-06A6K

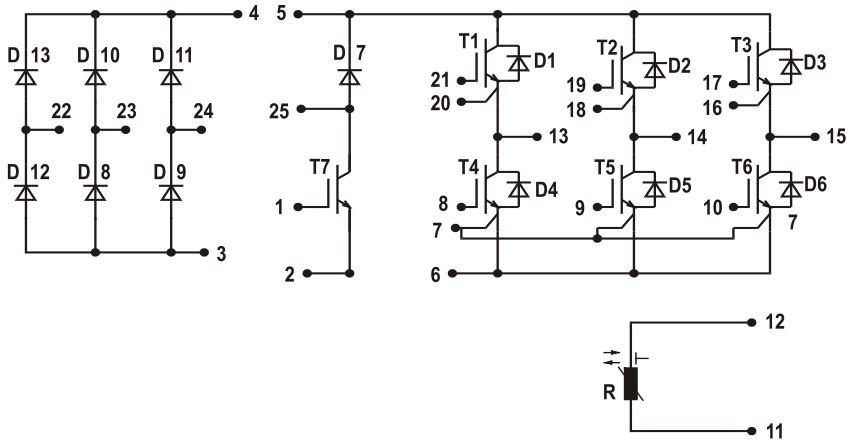

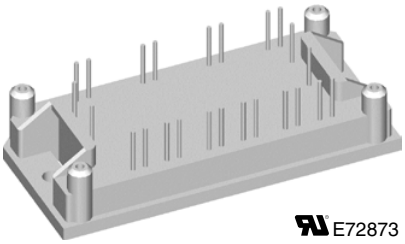

Pin configuration see outlines.

Features:

- High level of integration - only one power semiconductor module required for the whole drive
- Inverter with NPT IGBTs
- low saturation voltage
  - positive temperature coefficient
  - fast switching
  - short tail current
- Epitaxial free wheeling diodes with hiperfast and soft reverse recovery
- Industry standard package with insu lated copper base plate and soldering pins for PCB mounting
- Temperature sense included

Application:

AC motor drives with

- Input from single or three phase grid
- Three phase synchronous or asynchronous motor
- Electric braking operation

Package:

- UL registered
- Industry standard E1-pack

IXYS reserves the right to change limits, test conditions and dimensions.

20071113a

Ouput Inverter T1 - T6

Symbol	Definitions	Conditions		Ratings min.	typ.	max.	Unit
V_{CES}	*collector emitter voltage*		T_{VJ} = 25°C to 150°C			600	V
V_{GES}	*max. DC gate voltage*	continuous				±20	V
V_{GEM}	*max. transient collector gate voltage*	transient				±30	V
I_{C25}	*collector current*		T_C = 25°C			42	A
I_{C80}			T_C = 80°C			29	A
P_{tot}	*total power dissipation*		T_C = 25°C			130	W
$V_{CE(sat)}$	*collector emitter saturation voltage*	I_C = 35 A; V_{GE} = 15 V	T_{VJ} = 25°C		2.3	2.7	V
			T_{VJ} = 125°C		2.6		V
$V_{GE(th)}$	*gate emitter threshold voltage*	I_C = 0.7 mA; V_{GE} = V_{CE}	T_{VJ} = 25°C	4.5		6.5	V
I_{CES}	*collector emitter leakage current*	V_{CE} = V_{CES}; V_{GE} = 0 V	T_{VJ} = 25°C			0.75	mA
			T_{VJ} = 125°C		1.5		mA
I_{GES}	*gate emitter leakage current*	V_{CE} = 0 V; V_{GE} = ±20 V				200	nA
C_{ies}	*input capacitance*	V_{CE} = 25 V; V_{GE} = 0 V; f = 1 MHz			1600		pF
$Q_{G(on)}$	*total gate charge*	V_{CE} = 300 V; V_{GE} = 15 V; I_C = 30 A			95		nC
$t_{d(on)}$	*turn-on delay time*	inductive load	T_{VJ} = 125°C		50		ns
t_r	*current rise time*	V_{CE} = 300 V; I_C = 30 A			50		ns
$t_{d(off)}$	*turn-off delay time*	V_{GE} = ±15 V; R_G = 33 Ω			270		ns
t_f	*current fall time*				40		ns
E_{on}	*turn-on energy per pulse*				1.4		mJ
E_{off}	*turn-off energy per pulse*				1.0		mJ
I_{CM}	*reverse bias safe operating area*	RBSOA; V_{GE} = ±15 V; R_G = 33 Ω L = 100 µH; clamped induct. load V_{CEmax} = V_{CES} - L_S·di/dt	T_{VJ} = 125°C		60		A
t_{SC} (SCSOA)	*short circuit safe operating area*	V_{CE} = 600 V; V_{GE} = ±15 V; R_G = 82 Ω; non-repetitive	T_{VJ} = 125°C		10		µs
R_{thJC}	*thermal resistance junction to case*	(per IGBT)				0.95	K/W
R_{thCH}	*thermal resistance case to heatsink*	(per IGBT)			0.35		K/W

Output Inverter D1 - D6

Symbol	Definitions	Conditions		Ratings min.	typ.	max.	Unit
V_{RRM}	*max. repetitve reverse voltage*		T_{VJ} = 150°C			600	V
I_{F25}	*forward current*		T_C = 25°C			69	A
I_{F80}			T_C = 80°C			46	A
V_F	*forward voltage*	I_F = 35 A; V_{GE} = 0 V	T_{VJ} = 25°C			1.7	V
			T_{VJ} = 125°C		1.2		V
I_{RM}	*max. reverse recovery current*	V_R = 100 V			5		A
t_{rr}	*reverse recovery time*	di_F/dt = -100 A/µs	T_{VJ} = 100°C		100		ns
$E_{rec(off)}$	*reverse recovery energy*	I_F = 50 A; V_{GE} = 0 V			tbd		µJ
R_{thJC}	*thermal resistance junction to case*	(per diode)				0.9	K/W
R_{thCH}	*thermal resistance case to heatsink*	(per diode)			0.3		K/W

T_C = 25°C unless otherwise stated

Brake Chopper T7

Symbol	Definitions	Conditions		Ratings min.	typ.	max.	Unit
V_{CES}	*collector emitter voltage*		T_{VJ} = 25°C to 150°C			600	V
V_{GES}	*max. DC gate voltage*	continuous				±20	V
V_{GEM}	*max. transient collector gate voltage*	transient				±30	V
I_{C25}	*collector current*		T_C = 25°C			25	A
I_{C80}			T_C = 80°C			17	A
P_{tot}	*total power dissipation*		T_C = 25°C			80	W
$V_{CE(sat)}$	*collector emitter saturation voltage*	I_C = 15 A; V_{GE} = 15 V	T_{VJ} = 25°C		2.0	2.4	V
			T_{VJ} = 125°C		2.3		V
$V_{GE(th)}$	*gate emitter threshold voltage*	I_C = 0.4 mA; V_{GE} = V_{CE}	T_{VJ} = 25°C	4.5		6.5	V
I_{CES}	*collector emitter leakage current*	V_{CE} = V_{CES}; V_{GE} = 0 V	T_{VJ} = 25°C			0.5	mA
			T_{VJ} = 125°C		0.8		mA
I_{GES}	*gate emitter leakage current*	V_{CE} = 0 V; V_{GE} = ±20 V				100	nA
C_{ies}	*input capacitance*	V_{CE} = 25 V; V_{GE} = 0 V; f = 1 MHz			800		pF
$Q_{G(on)}$	*total gate charge*	V_{CE} = 300 V; V_{GE} = 15 V; I_C = 15 A			57		nC
$t_{d(on)}$	*turn-on delay time*	inductive load	T_{VJ} = 125°C		30		ns
t_r	*current rise time*	V_{CE} = 300 V; I_C = 15 A			50		ns
$t_{d(off)}$	*turn-off delay time*	V_{GE} = ±15 V; R_G = 68 Ω			270		ns
t_f	*current fall time*				40		ns
E_{on}	*turn-on energy per pulse*				0.7		mJ
E_{off}	*turn-off energy per pulse*				0.5		mJ
I_{CM}	*reverse bias safe operating area*	RBSOA; V_{GE} = ±15 V; R_G = 68 Ω L = 100 µH; clamped induct. load V_{CEmax} = V_{CES} - L_S·di/dt	T_{VJ} = 125°C		30		A
t_{SC} (SCSOA)	*short circuit safe operating area*	V_{CE} = 600 V; V_{GE} = ±15 V; R_G = 82 Ω; non-repetitive	T_{VJ} = 125°C		10		µs
R_{thJC}	*thermal resistance junction to case*	(per IGBT)				1.55	K/W
R_{thCH}	*thermal resistance case to heatsink*	(per IGBT)			0.5		K/W

Brake Chopper D7

Symbol	Definitions	Conditions		Ratings min.	typ.	max.	Unit
V_{RRM}	*max. repetitive reverse voltage*		T_{VJ} = 150°C			600	V
I_{F25}	*forward current*		T_C = 25°C			21	A
I_{F80}			T_C = 80°C			14	A
V_F	*forward voltage*	I_F = 15 A; V_{GE} = 0 V	T_{VJ} = 25°C			2.3	V
			T_{VJ} = 125°C		1.5		V
I_R	*reverse current*	V_R = V_{RRM}	T_{VJ} = 25°C			0.06	mA
			T_{VJ} = 125°C		0.2		mA
I_{RM}	*max. reverse recovery current*	V_R = 100 V; I_F = 12 A			3.5		A
t_{rr}	*reverse recovery time*	di_F/dt = -100 A/µs	T_{VJ} = 100°C		80		ns
R_{thJC}	*thermal resistance junction to case*	(per diode)				2.5	K/W
R_{thCH}	*thermal resistance case to heatsink*	(per diode)			0.85		K/W

T_C = 25°C unless otherwise stated

IXYS reserves the right to change limits, test conditions and dimensions.

20071113a

Input Rectifier Bridge D8 - D13

Symbol	Definitions	Conditions		Maximum Ratings	
V_{RRM}	*max. repetitive reverse voltage*			1600	V
I_{FAV}	*average forward current*	sine 180°	T_C = 80°C	31	A
I_{DAVM}	*max. average DC output current*	rectangular; d = $^1/_3$; bridge	T_C = 80°C	89	A
I_{FSM}	*max. surge forward current*	t = 10 ms; sine 50 Hz	T_C = 25°C	320	A
P_{tot}	*total power dissipation*		T_C = 25°C	80	W

Symbol	Conditions			Characteristic Values			
				min.	typ.	max.	
V_F	*forward voltage*	I_F = 30 A	T_{VJ} = 25°C		1.0	1.35	V
			T_{VJ} = 125°C		1.1		V
I_R	*reverse current*	$V_R = V_{RRM}$	T_{VJ} = 25°C			0.02	mA
			T_{VJ} = 125°C		0.4		mA
R_{thJC}	*thermal resistance junction to case*	(per diode)	T_{VJ} = 25°C			1.4	K/W
R_{thCH}	*thermal resistance case to heatsink*	(per diode)			0.45		K/W

Temperature Sensor NTC

Symbol	Definitions	Conditions		Ratings min.	typ.	max.	Unit
R_{25}	*resistance*		T_C = 25°C	4.45	4.7	5.0	kΩ
$B_{25/85}$					3510		K

Module

Symbol	Definitions	Conditions	Ratings min.	typ.	max.	Unit
T_{VJ}	*operating temperature*		-40		125	°C
T_{VJM}	*max. virtual junction temperature*				150	°C
T_{stg}	*storage temperature*		-40		125	°C
V_{ISOL}	*isolation voltage*	$I_{ISOL} \leq$ 1 mA; 50/60 Hz			2500	V~
M_d	*mounting torque*	(M4)	2.0		2.2	Nm
d_S	*creep distance on surface*		12.7			mm
d_A	*strike distance through air*		12.7			mm
Weight				40		g

Equivalent Circuits for Simulation

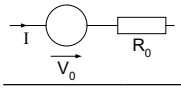

Symbol	Definitions	Conditions		Ratings min.	typ.	max.	Unit
V_0	*rectifier diode*	D8 - D13	T_{VJ} = 125°C		0.90		V
R_0					9		mΩ
V_0	*IGBT*	T1 - T6	T_{VJ} = 125°C		1.0		V
R_0					4		mΩ
V_0	*free wheeling diode*	D1 - D6	T_{VJ} = 125°C		1.05		V
R_0					7		mΩ
V_0	*IGBT*	T7	T_{VJ} = 125°C		1.0		V
R_0					70		mΩ
V_0	*free wheeling diode*	D7	T_{VJ} = 125°C		1.25		V
R_0					26		mΩ

T_C = 25°C unless otherwise stated

Outline Drawing

Dimensions in mm (1 mm = 0.0394")

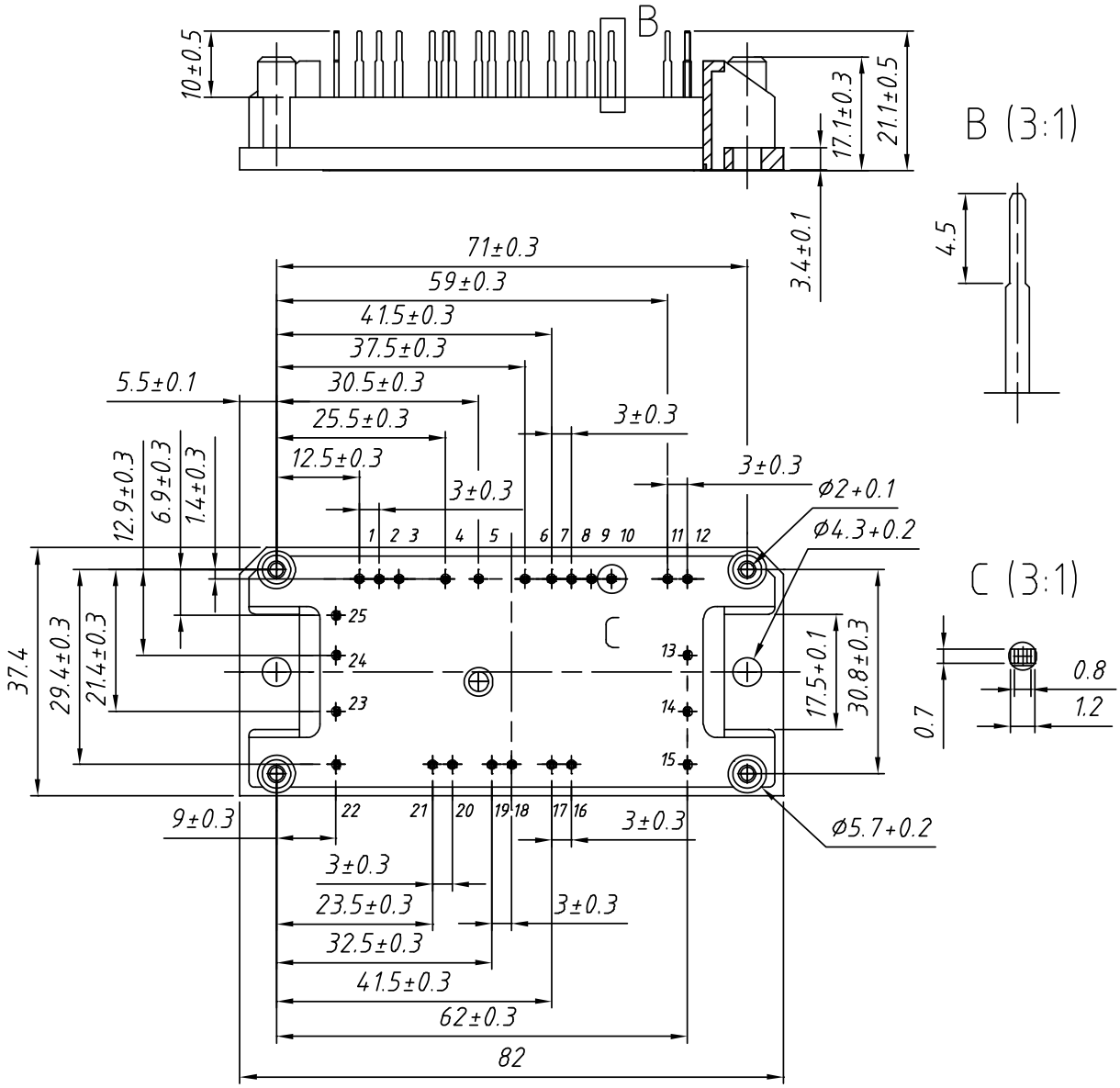

Product Marking

Ordering	Part Name	Marking on Product	Delivering Mode	Base Qty	Ordering Code
Standard	MUBW 35-06A6K	MUBW35-06A6K	Box	10	500 117