MICRO SWITCH
a Honeywell Division
FED.MFG.CODE 91929

ACTUATOR–SWITCH

CATALOG LISTING
JS–254

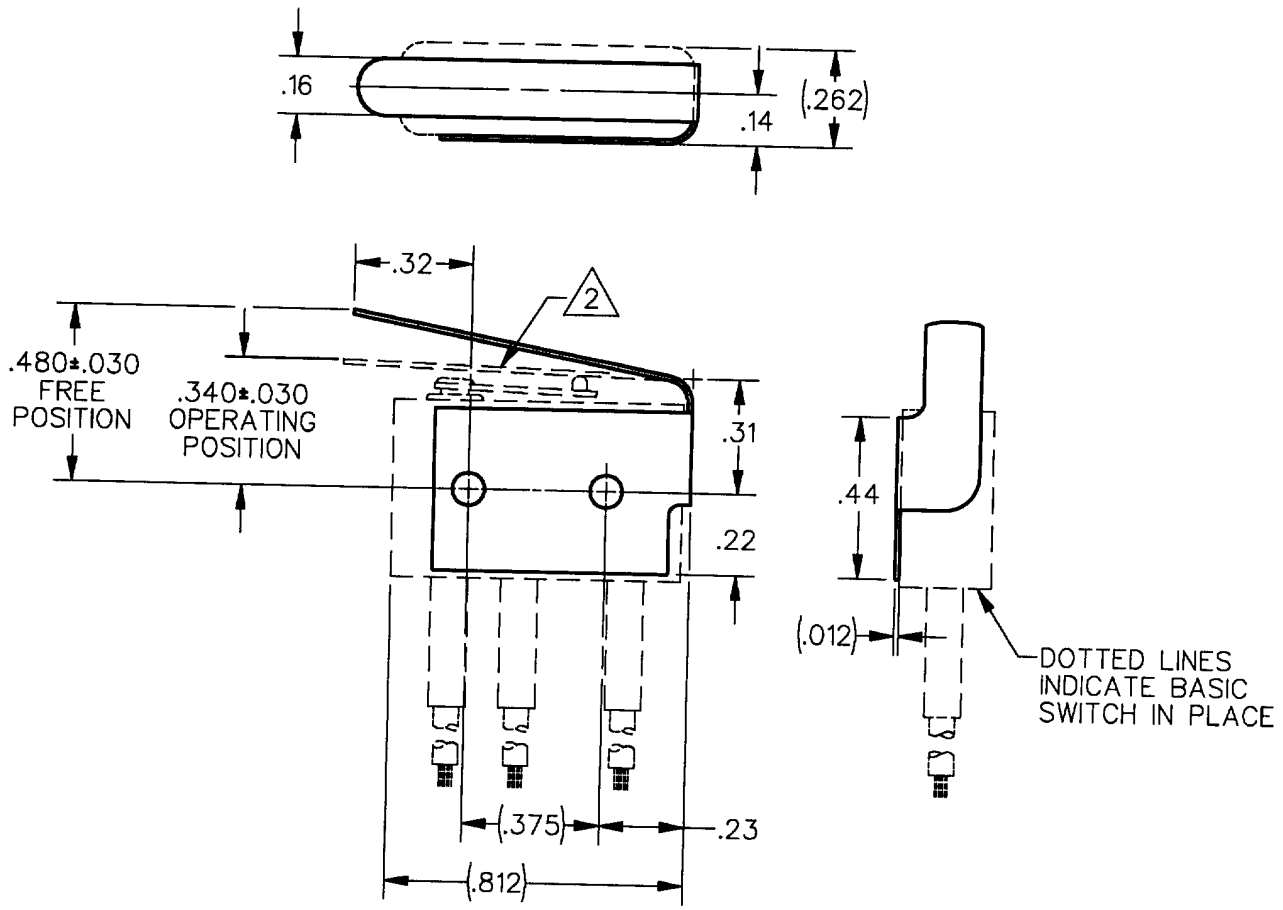

NOTES
1. CHARACTERISTICS WITH 6HM1–1 BASIC SWITCH INSTALLED ACTUATED .06 FROM END OF LEVER
2. ADJUSTMENT CAUTION: DO NOT ALLOW ACTUATOR LEAF TO COME IN CONTACT WITH HM LEVER TO PREVENT SWITCH SEAL DAMAGE

ANSI Y14.5M–1982 APPLIES

THIS DRAWING COVERS A PROPRIETARY ITEM AND IS THE PROPERTY OF MICRO SWITCH, A DIVISION OF HONEYWELL. THIS DRAWING IS NOT TO BE COPIED OR USED WITHOUT THE APPROVAL OF MICRO SWITCH.

THIRD ANGLE PROJECTION

CHARACTERISTICS 1	ELECTRICAL DATA	SCALE FULL / DO NOT SCALE PRINT
OPERATING FORCE — — — — 9 OZ MAX	CONTACT ARRANGEMENT	UNLESS OTHERWISE SPECIFIED TOLERANCES ARE
RELEASE FORCE — — — — — 2 OZ MIN		ONE PLACE (.0) ±.030
DIFFERENTIAL TRAVEL — — — .030 MAX		TWO PLACE (.00) ±.015
OVERTRAVEL — — — — — — .030 MIN		THREE PLACE (.000) ±.005
		ANGLES ±
		WEIGHT

JS–254 | RELEASE NO. PR–19880 | REPLACES | DRAWING NUMBER | ISSUE 2 | CHECK

REVISIONS
A PR–19880 TSM 4 MAY 92

DDM/CAD | DRAWN TSM 4 MAY 92 | CHECK MAM 4 MAY 92 | CHECK

Downloaded from Elcodis.com electronic components distributor