MICRO SWITCH
FREEPORT ILLINOIS, U.S.A
A DIVISION OF HONEYWELL
FED. MFG. CODE 91929

ACTUATOR–SWITCH

CATALOG LISTING
JS-308

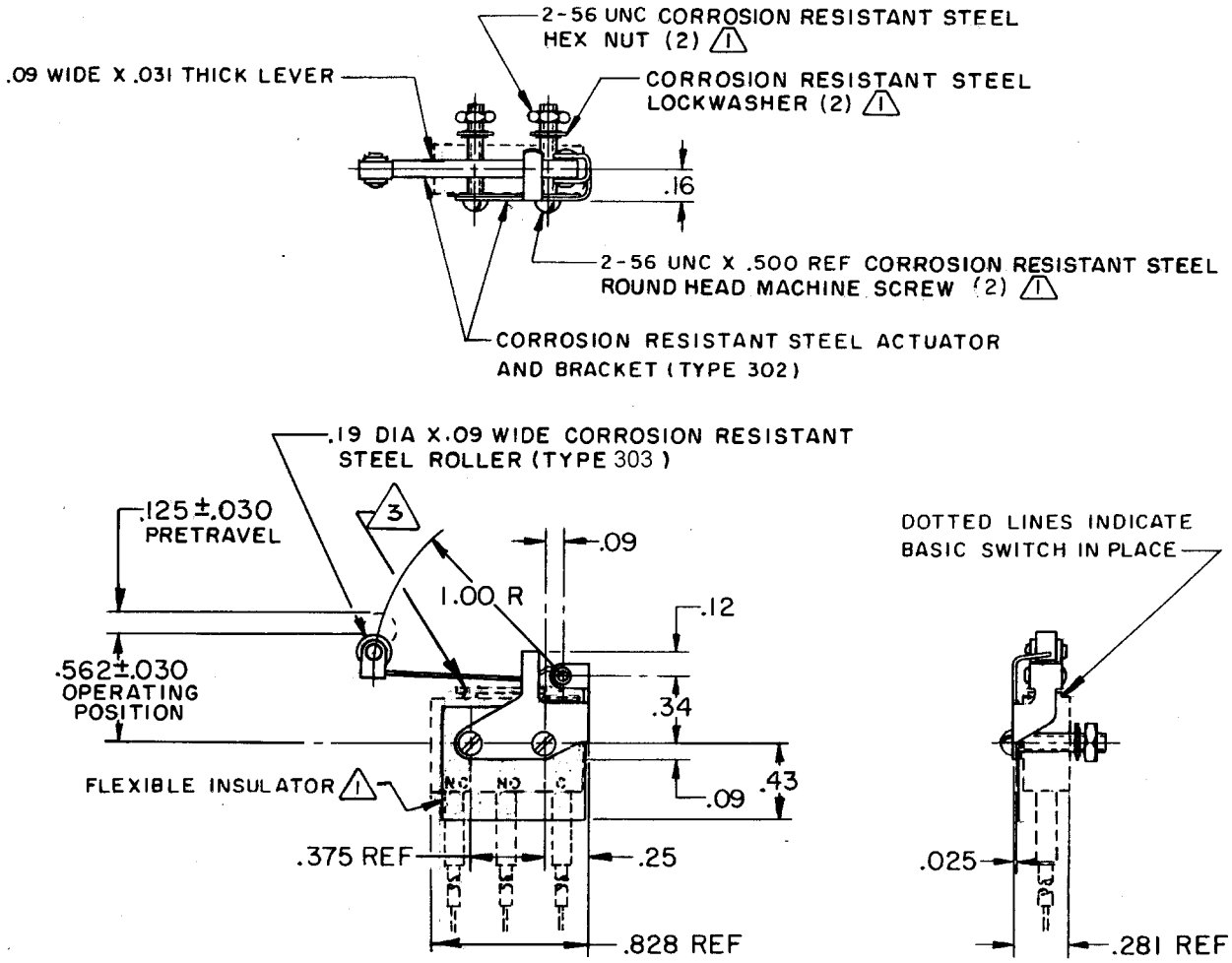

NOTE –
1. FURNISHED UNASSEMBLED
2. CHARACTERISTICS WITH 6HM1-1 BASIC SWITCH INSTALLED
3. ADJUSTMENT CAUTION: DO NOT ALLOW ACTUATOR LEVER TO COME IN CONTACT WITH HM LEVER TO PREVENT SWITCH SEAL DAMAGE

THIS DRAWING COVERS A PROPRIETARY ITEM AND IS THE PROPERTY OF MICRO SWITCH, A DIVISION OF HONEYWELL. THIS DRAWING IS NOT TO BE COPIED OR USED WITHOUT THE APPROVAL OF MICRO SWITCH.

CHARACTERISTICS 2	ELECTRICAL DATA	SCALE FULL
OPERATING FORCE — — — — 1.5 OZ MAX	CONTACT ARRANGEMENT	DO NOT SCALE PRINT
RELEASE FORCE — — — — — 4 GRAM MIN		UNLESS OTHERWISE NOTED DIMENSIONS ARE IN INCHES
DIFFERENTIAL TRAVEL — — — — .056 MAX		TOLERANCES ARE:
OVERTRAVEL — — — — — — — .025 MIN		ONE PLACE (.0) ±.030 TWO PLACE (.00) ±.015 THREE PLACE (.000) ±.005 ANGLES ±
		WEIGHT

REPLACES	JS-308
RELEASE NO.	PR-1924
DRAWING NUMBER	M
ISSUE	6
	14SEP05
	RJ
CHECK	
	21 AUG 69
	GCH
CHECK	
	21 AUG 69
	LSD
CHECK	
	20 AUG 69
DRAWN	MBS

REVISIONS

A	PR-1924	LSD 14 JUL 71
B	C029325	LSD 28 AUG 71
C	C066329	TSM 15 MAR 91
D	C079303	DLT 8 MAR 95
E	0015428	SPK 14SEP05

FO-50378-1A

Downloaded from Elcodis.com electronic components distributor