MICRO SWITCH
A DIVISION OF MINNEAPOLIS-HONEYWELL REGULATOR COMPANY
FREEPORT, ILLINOIS
FED. MFR. CODE 91929

PACKET

CATALOG LISTING
★ 5PAI

(M) 5PAI ISSUE I

REPLACES

RELEASE NO.

5PAI

M

DRAWING NUMBER

ISSUE 2 4

CHECK

REVISIONS

A	C09600	OMW 18 OCT 60
B	C031858	RER 19 MAR 73
C	C062204	WJK 5 NOV 87

CHECK

19 OCT 60

CHECK

CHECK 60 OCT 18

DRAWN OMW

FO-50378

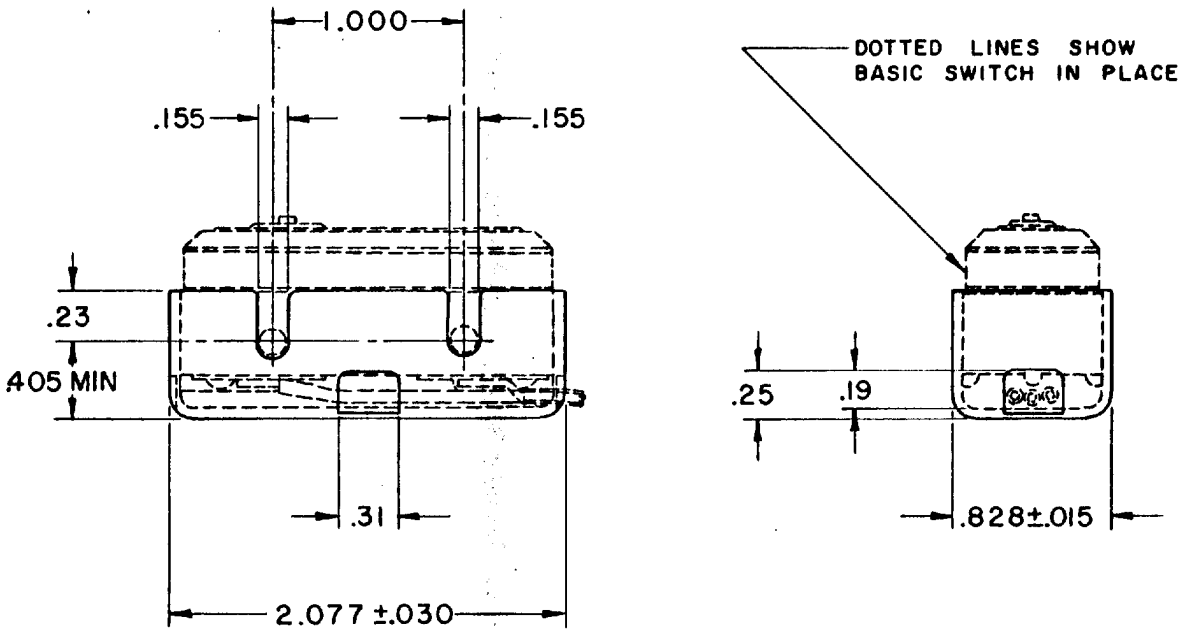

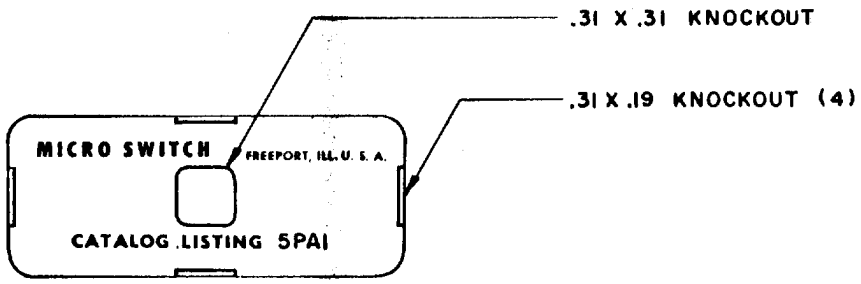

NOTE –
1 – PLASTIC MATERIAL– GENERAL PURPOSE PHENOLIC

THIS DRAWING COVERS A PROPRIETARY ITEM AND IS THE PROPERTY OF MICRO SWITCH, A DIVISION OF MINNEAPOLIS-HONEYWELL REGULATOR CO. THIS DRAWING IS NOT TO BE COPIED OR USED WITHOUT THE APPROVAL OF MICRO SWITCH.

CHARACTERISTICS	ELECTRICAL DATA		SCALE FULL
	CONTACT ARRANGEMENT	BREAK DISTANCE	DO NOT SCALE PRINT
			UNLESS OTHERWISE SPECIFIED DIMENSIONS ARE IN INCHES
			TOLERANCES ARE: ONE PLACE (.0) ±.030; TWO PLACE (.00) ±.015; THREE PLACE (.000) ±.005; ANGLES ±
			WEIGHT

Downloaded from Elcodis.com electronic components distributor