MICRO SWITCH
A DIVISION OF MINNEAPOLIS-HONEYWELL REGULATOR COMPANY
FREEPORT, ILLINOIS
FED. MFR. CODE 91929

ACTUATOR-SWITCH

CATALOG LISTING
JE-4

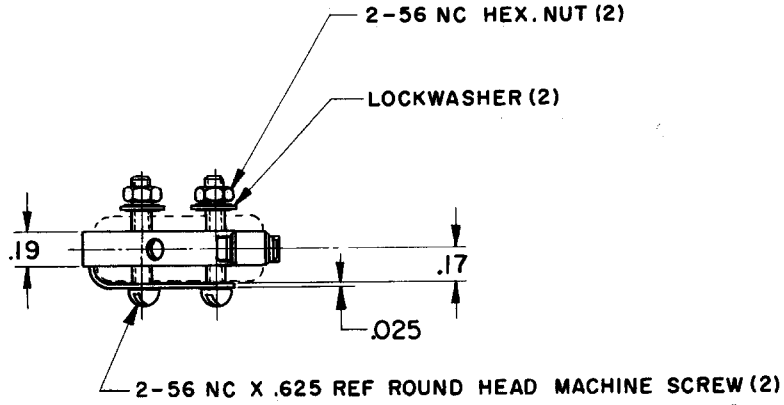

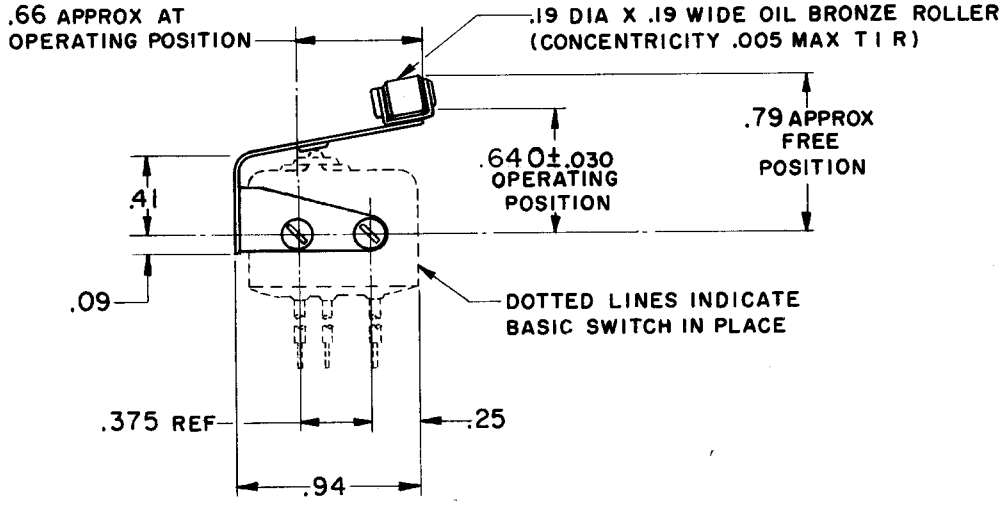

NOTE-
1- SCREWS, NUTS, AND LOCKWASHERS FURNISHED UNASSEMBLED

THIS DRAWING COVERS A PROPRIETARY ITEM AND IS THE PROPERTY OF MICRO SWITCH, A DIVISION OF MINNEAPOLIS-HONEYWELL REGULATOR CO. THIS DRAWING IS NOT TO BE COPIED OR USED WITHOUT THE APPROVAL OF MICRO SWITCH.

CHARACTERISTICS WITH ISEI BASIC SWITCH INSTALLED

OPERATING FORCE — — — — — 12 OZ MAX

RELEASE FORCE — — — — — — — 2 OZ MIN

DIFFERENTIAL TRAVEL — — — — .025 MAX

OVERTRAVEL — — — — — — — — .015 MIN

ELECTRICAL DATA

CONTACT ARRANGEMENT	BREAK DISTANCE

SCALE FULL
DO NOT SCALE PRINT

UNLESS OTHERWISE SPECIFIED
DIMENSIONS ARE IN INCHES
TOLERANCES ARE:

ONE PLACE	(.0)	±.030
TWO PLACE	(.00)	±.015
THREE PLACE	(.000)	±.005
ANGLES		±

WEIGHT

REPLACES
RELEASE NO. SR 9466
DRAWING NUMBER M JE-4
ISSUE X X X 5

REVISIONS

A	SR9466	L S D 7 FEB 61
B	C047771	C J H 17 MAY 80
C	C074078	L J F 25 NOV 92
D	C074078	L J F 25 NOV 92
E	C079303	DLT 2 MAR 95

CHECK 14 OCT 58 RED
CHECK
CHECK 58
DRAWN R. E. R. 14 OCT 58
FO-50378

Downloaded from Elcodis.com electronic components distributor