MICRO SWITCH
A DIVISION OF MINNEAPOLIS-HONEYWELL REGULATOR COMPANY
FREEPORT, ILLINOIS
FED. MFR. CODE 91929

SWITCH — ACTUATOR

CATALOG LISTING
JX-20

5

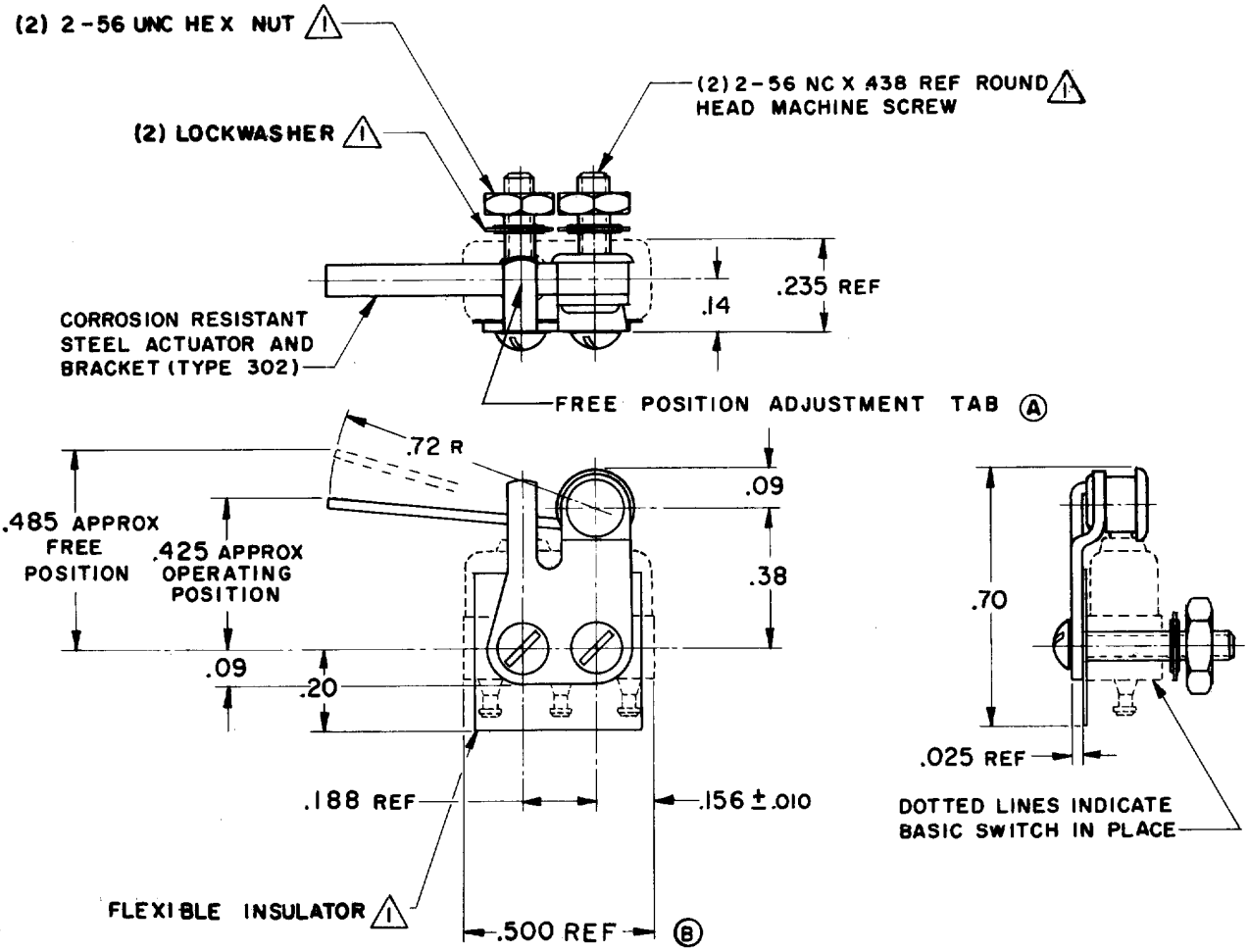

NOTE—
1 - FURNISHED UNASSEMBLED.

THIS DRAWING COVERS A PROPRIETARY ITEM AND IS THE PROPERTY OF MICRO SWITCH, A DIVISION OF MINNEAPOLIS-HONEYWELL REGULATOR CO. THIS DRAWING IS NOT TO BE COPIED OR USED WITHOUT THE APPROVAL OF MICRO SWITCH.

CHARACTERISTICS WITH ISXI-T BASIC SWITCH INSTALLED

OPERATING FORCE — — — — 1 OZ APPROX (A)

RELEASE FORCE — — — — — 4 GRAMS MIN

DIFFERENTIAL TRAVEL — — — .030 APPROX

OVERTRAVEL — — — — — — .030 APPROX

ELECTRICAL DATA

CONTACT ARRANGEMENT	BREAK DISTANCE

SCALE 2 TO 1

DO NOT SCALE PRINT

UNLESS OTHERWISE SPECIFIED
DIMENSIONS ARE IN INCHES
TOLERANCES ARE:

ONE PLACE	(.0)	±.030
TWO PLACE	(.00)	±.015
THREE PLACE	(.000)	±.005
ANGLES		±

WEIGHT

DRAWN	R. E. R.	18 SEPT 58	
CHECK	G C H	24 NOV 58	
CHECK			
CHECK	RED	23 SEPT 58	
CHECK	B. L. S.	14 NOV 58	

DRAWING NUMBER: M JX-20
RELEASE NO. SR-7915
REPLACES
ISSUE: X 5

REVISIONS

A	SR 7915	L M H 13 NOV 58
B	C014274	M B F 8 DEC 59
C	C047771	C J H 17 MAY 80
D	C074163	D H D 22 APR 93

FO-50378

Downloaded from Elcodis.com electronic components distributor