Asymmetrical - Bridge Trench + Field Stop IGBT® Power Module

V_{CES} = 1700V
I_C = 100A @ Tc = 80°C

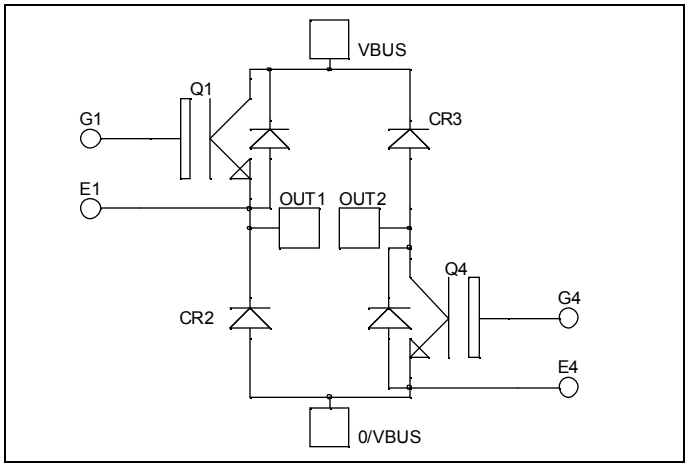

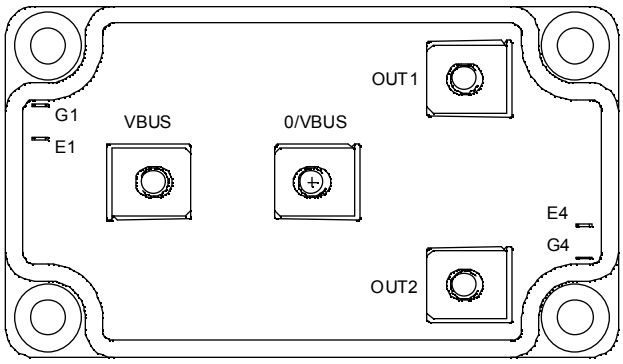

Application

- Welding converters
- Switched Mode Power Supplies
- Switched Reluctance Motor Drives

Features

- Trench + Field Stop IGBT® Technology
  - Low voltage drop
  - Low tail current
  - Switching frequency up to 20 kHz
  - Soft recovery parallel diodes
  - Low diode VF
  - Low leakage current
  - Avalanche energy rated
  - RBSOA and SCSOA rated
- Kelvin emitter for easy drive
- Very low stray inductance
  - Symmetrical design
  - M5 power connectors
- High level of integration

Benefits

- Stable temperature behavior
- Very rugged
- Direct mounting to heatsink (isolated package)
- Low junction to case thermal resistance
- Easy paralleling due to positive TC of VCEsat
- Low profile
- RoHS Compliant

Absolute maximum ratings

Symbol	*Parameter*		*Max ratings*	*Unit*
V_{CES}	Collector - Emitter Breakdown Voltage		1700	V
I_C	Continuous Collector Current	T_C = 25°C	150	A
		T_C = 80°C	100	
I_{CM}	Pulsed Collector Current	T_C = 25°C	200	
V_{GE}	Gate – Emitter Voltage		±20	V
P_D	Maximum Power Dissipation	T_C = 25°C	560	W
RBSOA	Reverse Bias Safe Operating Area	T_j = 125°C	200A @ 1600V	

CAUTION: These Devices are sensitive to Electrostatic Discharge. Proper Handing Procedures Should Be Followed. See application note APT0502 on www.microsemi.com

All ratings @ T_j = 25°C unless otherwise specified

Electrical Characteristics

Symbol	Characteristic	Test Conditions		Min	Typ	Max	Unit
I_{CES}	Zero Gate Voltage Collector Current	V_{GE} = 0V, V_{CE} = 1700V				350	µA
$V_{CE(sat)}$	Collector Emitter Saturation Voltage	V_{GE} = 15V I_C = 100A	T_j = 25°C		2.0	2.4	V
			T_j = 125°C		2.4		
$V_{GE(th)}$	Gate Threshold Voltage	V_{GE} = V_{CE}, I_C = 2mA		5.0	5.8	6.5	V
I_{GES}	Gate – Emitter Leakage Current	V_{GE} = 20V, V_{CE} = 0V				500	nA

Dynamic Characteristics

Symbol	Characteristic	Test Conditions		Min	Typ	Max	Unit
C_{ies}	Input Capacitance	V_{GE} = 0V V_{CE} = 25V f = 1MHz			9		nF
C_{oes}	Output Capacitance				0.36		
C_{res}	Reverse Transfer Capacitance				0.3		
$T_{d(on)}$	Turn-on Delay Time	Inductive Switching (25°C) V_{GE} = 15V V_{Bus} = 900V I_C = 100A R_G = 4.7 Ω			370		ns
T_r	Rise Time				40		
$T_{d(off)}$	Turn-off Delay Time				650		
T_f	Fall Time				180		
$T_{d(on)}$	Turn-on Delay Time	Inductive Switching (125°C) V_{GE} = 15V V_{Bus} = 900V I_C = 100A R_G = 4.7 Ω			400		ns
T_r	Rise Time				50		
$T_{d(off)}$	Turn-off Delay Time				800		
T_f	Fall Time				300		
E_{on}	Turn-on Switching Energy	V_{GE} = 15V V_{Bus} = 900V I_C = 100A R_G = 4.7 Ω	T_j = 125°C		32		mJ
E_{off}	Turn-off Switching Energy		T_j = 125°C		31		

Diode ratings and characteristics

Symbol	Characteristic	Test Conditions		Min	Typ	Max	Unit
V_{RRM}	Maximum Peak Repetitive Reverse Voltage			1700			V
I_{RM}	Maximum Reverse Leakage Current	V_R=1700V	T_j = 25°C			350	µA
			T_j = 125°C			600	
I_F	DC Forward Current		Tc = 80°C		100		A
V_F	Diode Forward Voltage	I_F = 100A	T_j = 25°C		1.8	2.2	V
			T_j = 125°C		1.9		
t_{rr}	Reverse Recovery Time	I_F = 100A V_R = 900V di/dt =1600A/µs	T_j = 25°C		385		ns
			T_j = 125°C		490		
Q_{rr}	Reverse Recovery Charge		T_j = 25°C		28		µC
			T_j = 125°C		46		
E_r	Reverse Recovery Energy		T_j = 25°C		12		mJ
			T_j = 125°C		24		

Thermal and package characteristics

Symbol	Characteristic			Min	Typ	Max	Unit
R_{thJC}	Junction to Case Thermal Resistance		IGBT			0.22	°C/W
			Diode			0.39	
V_{ISOL}	RMS Isolation Voltage, any terminal to case t =1 min, I isol<1mA, 50/60Hz			3500			V
T_J	Operating junction temperature range			-40		150	°C
T_{STG}	Storage Temperature Range			-40		125	
T_C	Operating Case Temperature			-40		100	
Torque	Mounting torque	To heatsink	M6	3		5	N.m
		For terminals	M5	2		3.5	
Wt	Package Weight					280	g

SP6 Package outline (dimensions in mm)

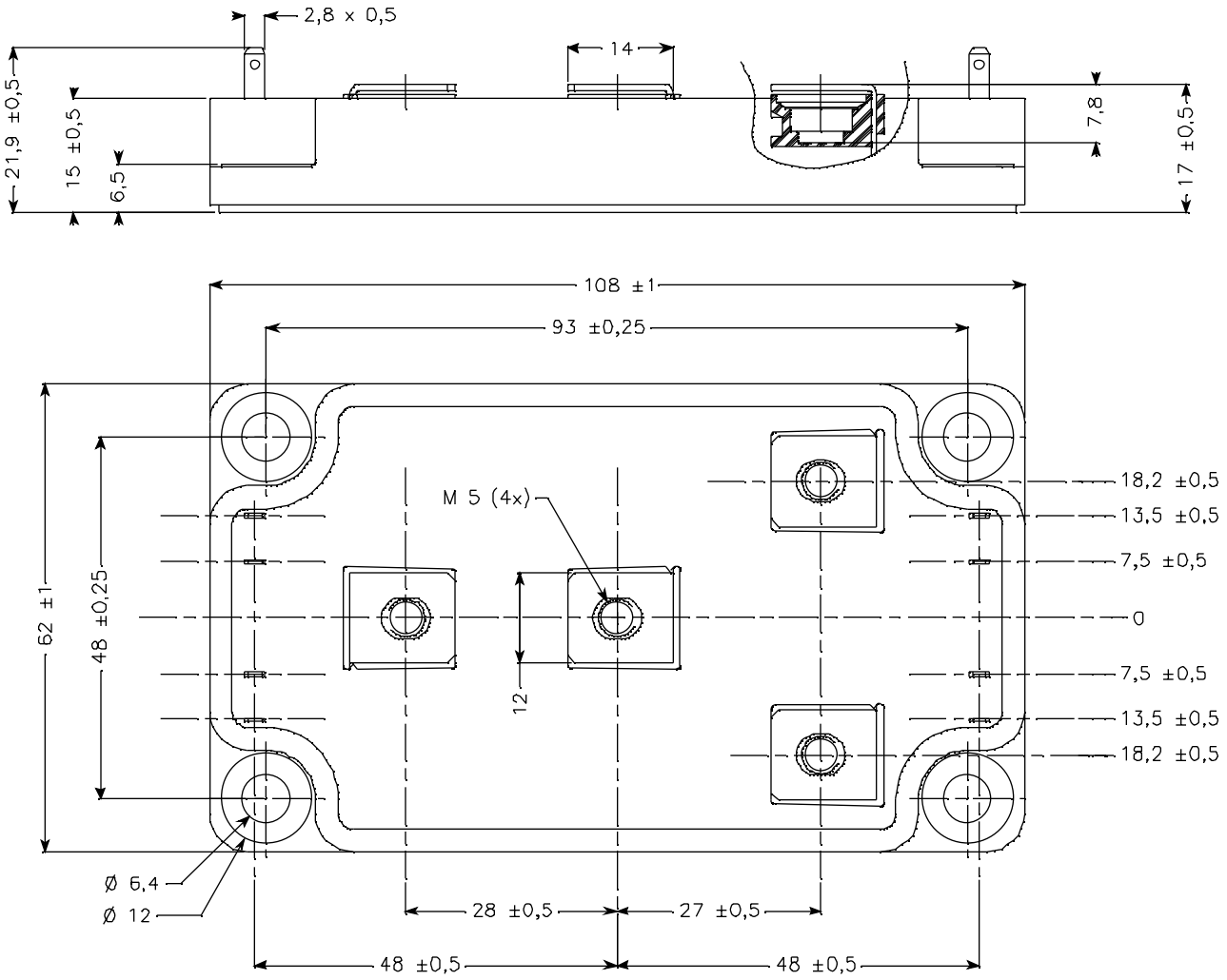

See application note APT0601 - Mounting Instructions for SP6 Power Modules on www.microsemi.com

Typical Performance Curve

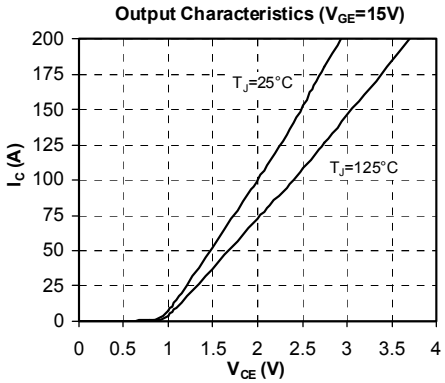

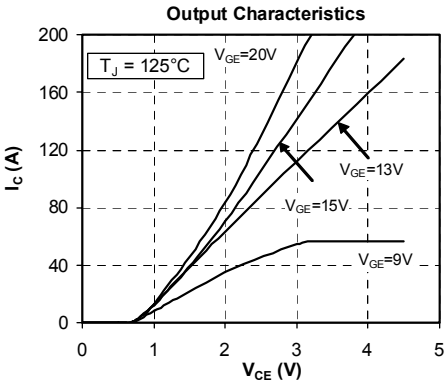

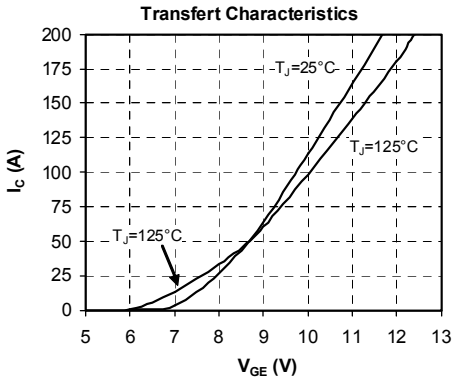

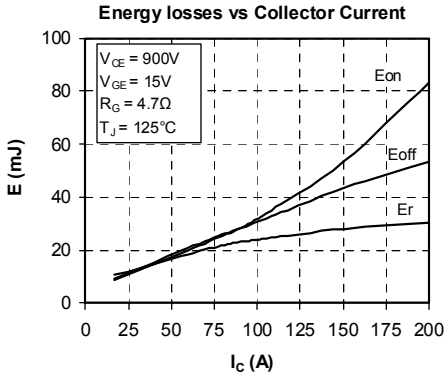

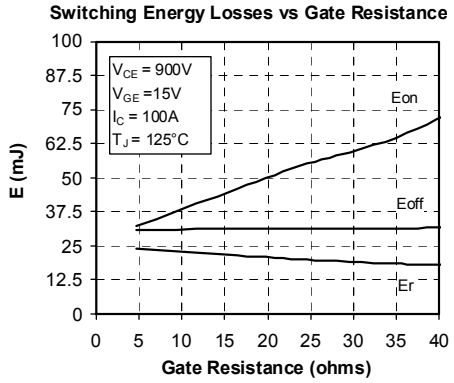

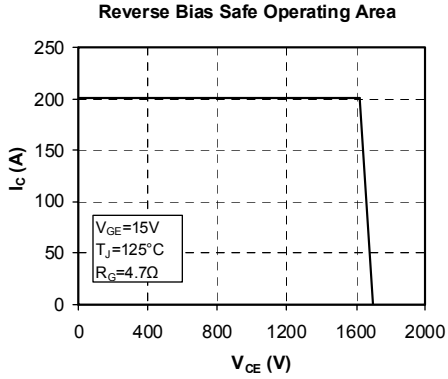

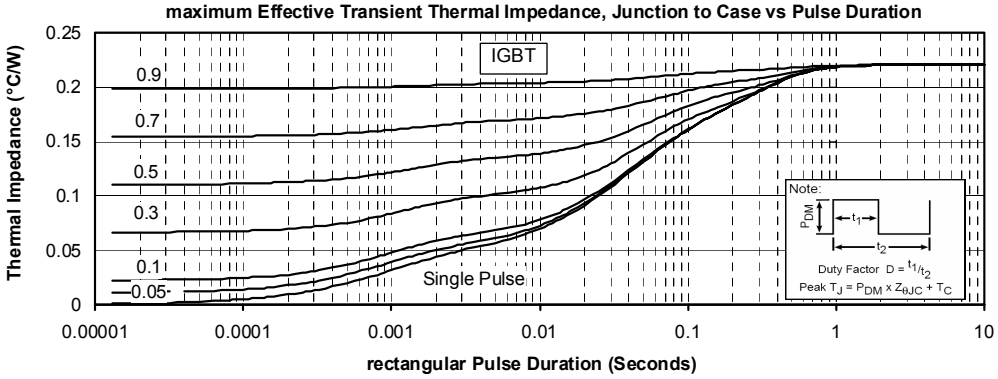

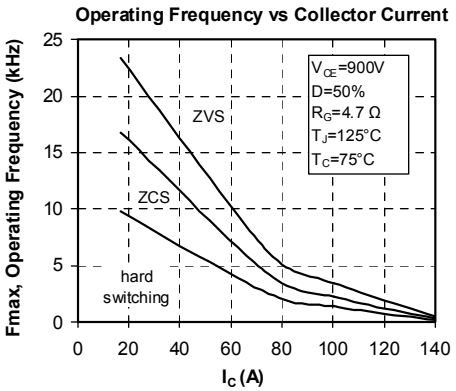

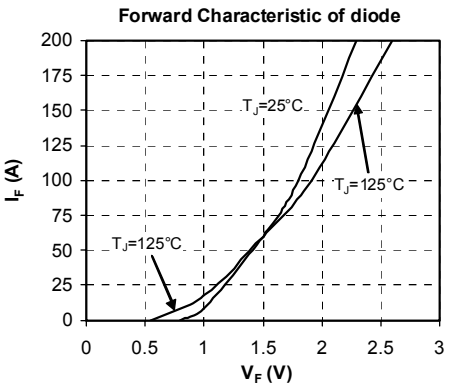

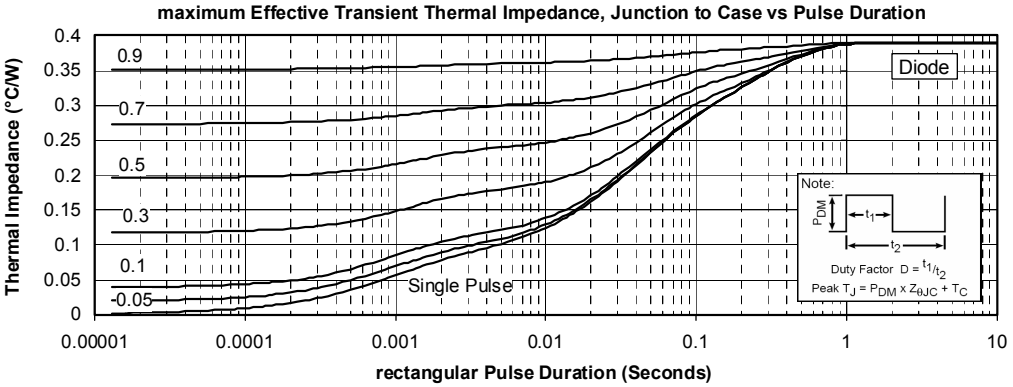

Microsemi reserves the right to change, without notice, the specifications and information contained herein

Microsemi's products are covered by one or more of U.S patents 4,895,810 5,045,903 5,089,434 5,182,234 5,019,522 5,262,336 6,503,786 5,256,583 4,748,103 5,283,202 5,231,474 5,434,095 5,528,058 and foreign patents. U.S and Foreign patents pending. All Rights Reserved.