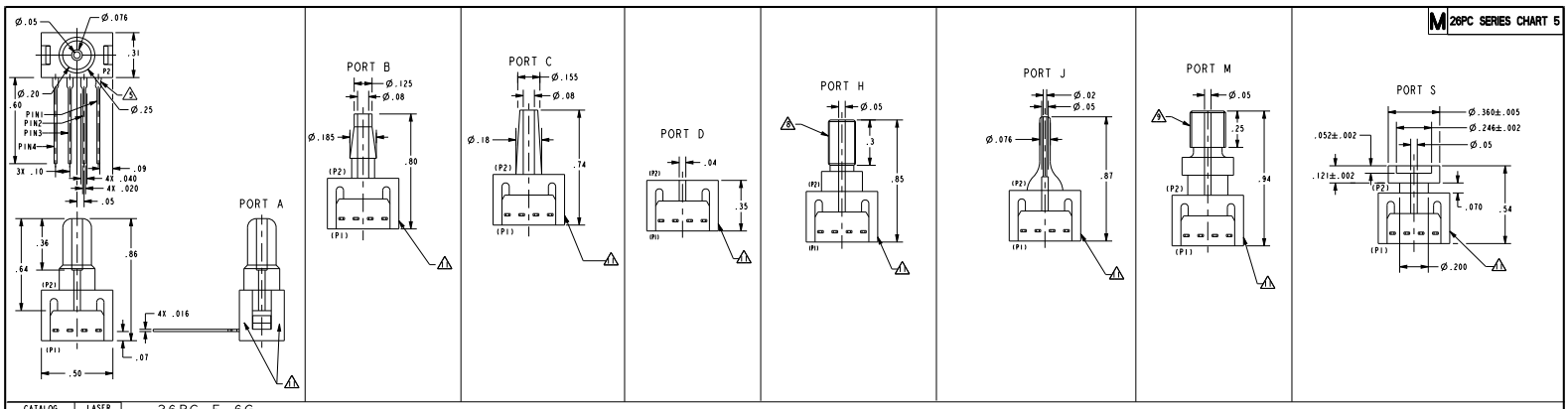

CATALOG LISTING	LASER BRAND
26PCCFH6G	6CF6G
(B) 26PCBFA6G	6BF6G
26PCCFA6G	6CF6G
26PCCFJ6G	6CF6G
26PCDFA6G	6DF6G
26PCEFA6G	6FF6G
(B) 26PCAFA6G	6AF6G
26PCBFM6G	6BF6G
(B) 26PCDFM6G	6DF6G
26PCFFM6G	6FF6G
26PCFFJ6G	6FF6G
26PCFFH6G	6FF6G
26PCAFB6G	6AF6G
26PCAFH6G	6AF6G
26PCBFB6G	6BF6G
26PCBFC6G	6BF6G
26PCBFD6G	6BF6G
26PCBFH6G	6BF6G
26PCBFJ6G	6BF6G
26PCCFB6G	6CF6G
26PCCEB6G	6CE6G
26PCCFC6G	6CF6G
26PCCFD6G	6CF6G
26PCDFB6G	6DF6G
26PCDFD6G	6DF6G
26PCFEB6G	6FE6G
26PCGFA6G	6GF6G
26PCGFM6G	6GF6G
26PCAFM6G	6AF6G
26PCCFM6G	6CF6G
26PCCEA6G	6CE6G
26PCDFJ6G	6DF6G
26PCGNM6G	6GN6G
26PCFFS6G	6FF6G
26PCBFS6G	6BF6G

26PC_F_6G

- STYLE
  - (G) GAGE
- TERMINATION
  - (6) 1 X 4 (1.60 IN.)
- PORT
  - (A) STRAIGHT
  - (B) BARB
  - (C) LUER
  - (D) MODULAR
  - (M) 5mm THREAD
  - (J) SMALL NEEDLE
  - (M) 1/4-28 THREAD
  - (S) MANIFOLD MOUNT
- SEAL
  - (F) FLUOROSILICONE
  - (E) EPDM
  - (N) NEOPRENE
- PRESSURE
  - (A) 1 PSI
  - (B) 5 PSI
  - (C) 15 PSI
  - (D) 30 PSI
  - (F) 100 PSI
  - (G) 250 PSI

GENERAL OPERATING CHARACTERISTICS
(ELECTRICAL PERFORMANCE AT 10.00±0.01 VDC EXCITATION, 25°C)

PRESSURE RANGE (PSI)	0 - 1			0 - 5			0 - 15			0 - 30			0 - 100			0 - 250			
	MIN	NOM	MAX	MIN	NOM	MAX	MIN	NOM	MAX	MIN	NOM	MAX	MIN	NOM	MAX	MIN	NOM	MAX	UNITS
SPAN (P2>P1) 1	14.7	16.7	18.7	47	50	53	97	100	103	97	100	103	95	100	105	143	150	157	mV
NULL OFFSET	-1.5	0	+1.5	-1.5	0	+1.5	-1.5	0	+1.5	-1.5	0	+1.5	-2.0	0	+2.0	-2.0	0	+2.0	mV
		TYP	MAX		TYP	MAX		TYP	MAX		TYP	MAX		TYP	MAX		TYP	MAX	UNITS
LINEARITY (BFSL, P2>P1)		0.25	0.5		0.4	0.5		0.25	0.5		0.1	0.2		0.4	0.6		0.5	0.7	%SPAN
NULL SHIFT (0 TO 25°C, 25 TO 50°C) 2		±0.5	±1.0		±0.5	±1.0		±0.5	±1.0		±0.75	±1.5		±1.0	±2.0		±1.0	±2.0	mV
SPAN SHIFT (0 TO 25°C, 25 TO 50°C) P2>P1 2		±1.0	±2.0		±1.0	±1.5		±0.75	±1.5		±0.75	±1.5		±0.5	±1.5		±0.5	±1.5	%SPAN
REPEATABILITY AND HYSTERESIS		±0.5			±0.2			±0.2			±0.2			±0.2			±0.2		%SPAN
OVERPRESSURE (P2>P1; P1>P2)			20			20			45			60			200			500	PSI

ALL PRESSURE RANGES	MIN	NOM	MAX	UNITS
EXCITATION VOLTAGE		10	16	VDC
INPUT RESISTANCE	5.5K	7.5K	11.5K	OHMS
OUTPUT RESISTANCE	1.5K	2.5K	3.0K	OHMS
RESPONSE TIME			1.0	ms

TEMPERATURE RANGES	
STORAGE	-55°C TO +100°C (-67°F TO +212°F)
OPERATE	-40°C TO +85°C (-40F° TO +185°F)
COMPENSATED	0 TO +50°C (+32°F TO +122°F)
OPERATE 2	-20°C TO +85°C

NOTES
1 - SPAN IS THE ALGEBRAIC DIFFERENCE BETWEEN OUTPUT AT MAXIMUM RATED OPERATING PRESSURE AND OUTPUT AT 0 PSI
2 - TEMPERATURE ERROR IS CALCULATED WITH RESPECT TO 25°C
3 - INPUT MEDIA LIMITED ONLY TO THOSE MATERIALS THAT WILL NOT ATTACK SILICON, THE HOUSING MATERIAL OR SEAL MATERIAL
4 - TERMINALS ARE PLATED FOR SOLDERING (LIMIT SOLDERING TO 315°C FOR 10 SECONDS MAXIMUM)
5 - PIN 1 IS IDENTIFIED BY NOTCH IN LEAD
6 - SENSOR IS OPERATIONAL OVER VACUUM PRESSURE RANGE
7 - RATIOMETRIC TO SUPPLY VOLTAGE
8 - M5 THREADED PRODUCT
RECOMMENDED TORQUE FOR SEALING: 4 IN-LBS
DO NOT EXCEED 6 IN-LBS OF TORQUE
SIZE 007 O-RING
O-RING COUNTERBORE DIMENSIONS
Ø.300±.003 X ↧.040
9 - 1/4-28 UNF THREADED PRODUCT:
RECOMMENDED TORQUE FOR SEALING: 8 IN-LBS
DO NOT EXCEED 12 IN-LBS OF TORQUE
SIZE 009 O-RING
O-RING COUNTERBORE DIMENSIONS:
Ø.360±.003 X ↧.040±.002
10 - THIS IS FOR CATALOG LISTINGS WITH EPDM SEALS ONLY
11 - CATALOG LISTING AND DATE CODE HERE. ALTERNATE FORMAT OF CATALOG LISTING BRAND IS THE ENTIRE CATALOG LISTING

CIRCUIT DIAGRAM

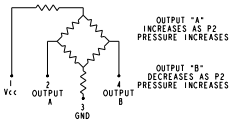

METRIC	INCHES
0,41	.016
0,51	.020
1,02	.040
1,3	.05
1,8	.07
1,93	.076
2,0	.08
2,3	.09
2,5	.10
5,1	.20
6,4	.25
7,9	.31
9,1	.36
12,7	.50
15,3	.60
16,3	.64
20,4	.80
21,6	.85
21,8	.86
22,1	.87
23,9	.94

THIRD ANGLE PROJECTION
SCALE 3 : 1
DO NOT SCALE PRINT
UNLESS OTHERWISE SPECIFIED TOLERANCES ARE
ONE PLACE (.0) ±.030
TWO PLACE (.00) ±.015
THREE PLACE (.000) ±.005
ANGLES ±
WEIGHT 2 OZ.

THIS DRAWING COVERS A PROPRIETARY ITEM AND IS THE PROPERTY OF MICRO SWITCH, A DIVISION OF HONEYWELL. THIS DRAWING IS NOT TO BE COPIED OR USED WITHOUT THE APPROVAL OF MICRO SWITCH.

FED. MFG. CODE 01929
MICROSWITCH a Honeywell Division
BRIDGE PRESSURE SENSOR
CATALOG LISTING
26PC SERIES CHART 5

ANSI Y14.5M-1982 APPLIES

PTC/CAD 50
J A T 16FEB93 26PC SERIES CHART 5 DR 1 REVISED: CO-7253 RELEASE DATE: 15APR93 DRAWING NUMBER: 57 SAV 17FEB93 RS 5 C.J.AMOS

Downloaded from Elcodis.com electronic components distributor