Reflective Optical Sensor with Transistor Output

19156_2

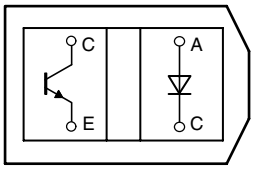

Top view 19156_1

FEATURES

- Package type: leaded
- Detector type: phototransistor
- Dimensions (L x W x H in mm): 10.2 x 5.8 x 7
- Peak operating distance: 2.5 mm
- Operating range within > 20 % relative collector current: 0.2 mm to 15 mm
- Typical output current under test: I_C = 1 mA
- Daylight blocking filter
- Emitter wavelength: 950 nm
- Lead (Pb)-free soldering released
- Compliant to RoHS directive 2002/95/EC and in accordance to WEEE 2002/96/EC

Pb-free

e2

RoHS COMPLIANT

DESCRIPTION

The TCRT5000 and TCRT5000L are reflective sensors which include an infrared emitter and phototransistor in a leaded package which blocks visible light. The package includes two mounting clips. TCRT5000L is the long lead version.

APPLICATIONS

- Position sensor for shaft encoder
- Detection of reflective material such as paper, IBM cards, magnetic tapes etc.
- Limit switch for mechanical motions in VCR
- General purpose - wherever the space is limited

PRODUCT SUMMARY

PART NUMBER	DISTANCE FOR MAXIMUM CTR_{rel} (1) (mm)	DISTANCE RANGE FOR RELATIVE I_{out} > 20 % (mm)	TYPICAL OUTPUT CURRENT UNDER TEST (2) (mA)	DAYLIGHT BLOCKING FILTER INTEGRATED
TCRT5000	2.5	0.2 to 15	1	Yes
TCRT5000L	2.5	0.2 to 15	1	Yes

Notes

(1) CTR: current transfere ratio, I_{out}/I_{in}

(2) Conditions like in table basic charactristics/sensors

ORDERING INFORMATION

ORDERING CODE	PACKAGING	VOLUME (1)	REMARKS
TCRT5000	Tube	MOQ: 4500 pcs, 50 pcs/tube	3.5 mm lead length
TCRT5000L	Tube	MOQ: 2400 pcs, 48 pcs/tube	15 mm lead length

Note

(1) MOQ: minimum order quantity

ABSOLUTE MAXIMUM RATINGS (1)

PARAMETER	TEST CONDITION	SYMBOL	VALUE	UNIT
INPUT (EMITTER)				
Reverse voltage		V_R	5	V
Forward current		I_F	60	mA
Forward surge current	$t_p \leq 10$ µs	I_{FSM}	3	A
Power dissipation	$T_{amb} \leq 25$ °C	P_V	100	mW
Junction temperature		T_j	100	°C

ABSOLUTE MAXIMUM RATINGS (1)				
PARAMETER	TEST CONDITION	SYMBOL	VALUE	UNIT
OUTPUT (DETECTOR)				
Collector emitter voltage		V_{CEO}	70	V
Emitter collector voltage		V_{ECO}	5	V
Collector current		I_C	100	mA
Power dissipation	$T_{amb} \leq 55$ °C	P_V	100	mW
Junction temperature		T_j	100	°C
SENSOR				
Total power dissipation	$T_{amb} \leq 25$ °C	P_{tot}	200	mW
Ambient temperature range		T_{amb}	- 25 to + 85	°C
Storage temperature range		T_{stg}	- 25 to + 100	°C
Soldering temperature	2 mm from case, $t \leq 10$ s	T_{sd}	260	°C

Note
(1) T_{amb} = 25 °C, unless otherwise specified

ABSOLUTE MAXIMUM RATINGS

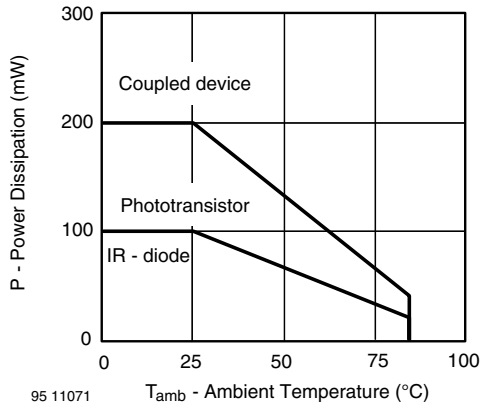

Fig. 1 - Power Dissipation Limit vs. Ambient Temperature

BASIC CHARACTERISTICS (1)						
PARAMETER	TEST CONDITION	SYMBOL	MIN.	TYP.	MAX.	UNIT
INPUT (EMITTER)						
Forward voltage	I_F = 60 mA	V_F		1.25	1.5	V
Junction capacitance	V_R = 0 V, f = 1 MHz	C_j		17		pF
Radiant intensity	I_F = 60 mA, t_p = 20 ms	I_e			21	mW/sr
Peak wavelength	I_F = 100 mA	λ_P	940			nm
Virtual source diameter	Method: 63 % encircled energy	d		2.1		mm
OUTPUT (DETECTOR)						
Collector emitter voltage	I_C = 1 mA	V_{CEO}	70			V
Emitter collector voltage	I_e = 100 µA	V_{ECO}	7			V
Collector dark current	V_{CE} = 20 V, I_F = 0 A, E = 0 lx	I_{CEO}		10	200	nA
SENSOR						
Collector current	V_{CE} = 5 V, I_F = 10 mA, D = 12 mm	I_C (2) (3)	0.5	1	2.1	mA
Collector emitter saturation voltage	I_F = 10 mA, I_C = 0.1 mA, D = 12 mm	V_{CEsat} (2) (3)			0.4	V

Note
(1) T_{amb} = 25 °C, unless otherwise specified
(2) See figure 3
(3) Test surface: mirror (Mfr. Spindler a. Hoyer, Part No. 340005)

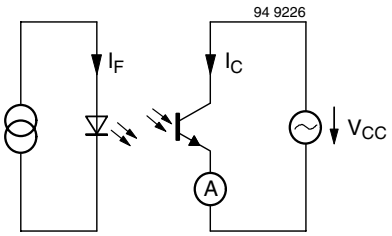

Fig. 2 - Test Circuit

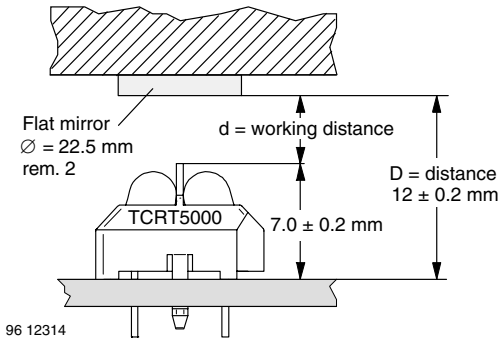

Fig. 3 - Test Circuit

BASIC CHARACTERISTICS

T_{amb} = 25 °C, unless otherwise specified

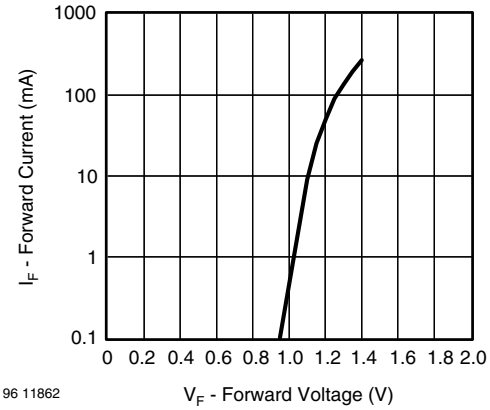

Fig. 4 - Forward Current vs. Forward Voltage

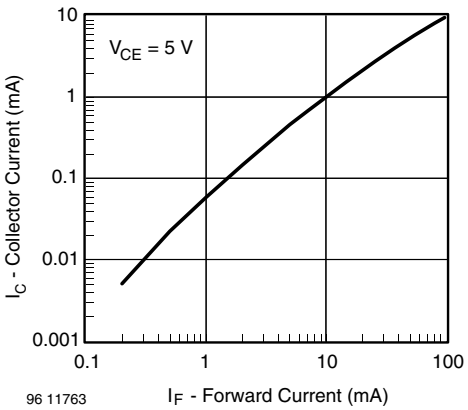

Fig. 6 - Collector Current vs. Forward Current

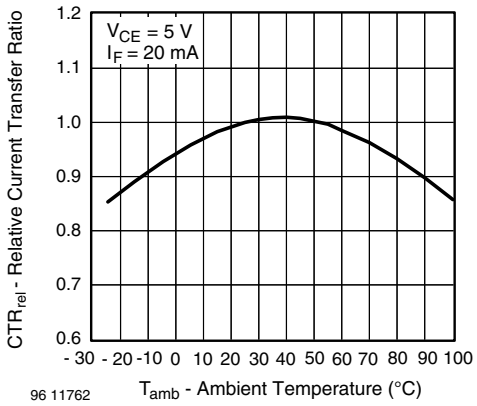

Fig. 5 - Relative Current Transfer Ratio vs. Ambient Temperature

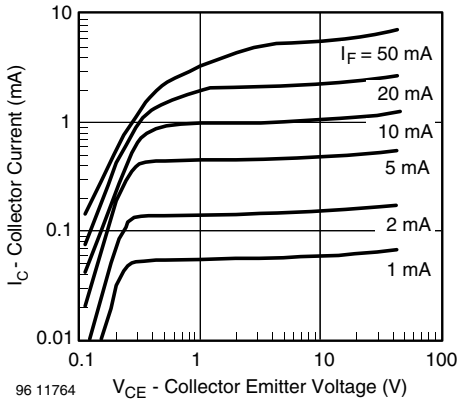

Fig. 7 - Collector Emitter Saturation Voltage vs. Collector Current

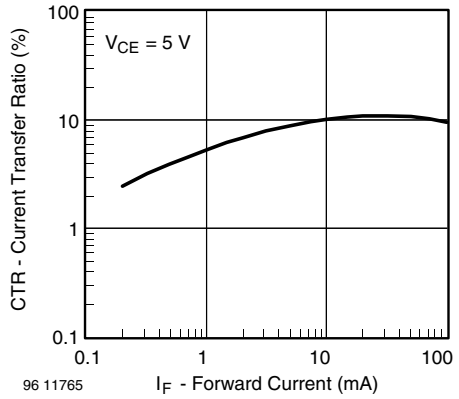

Fig. 8 - Current Transfer Ratio vs. Forward Current

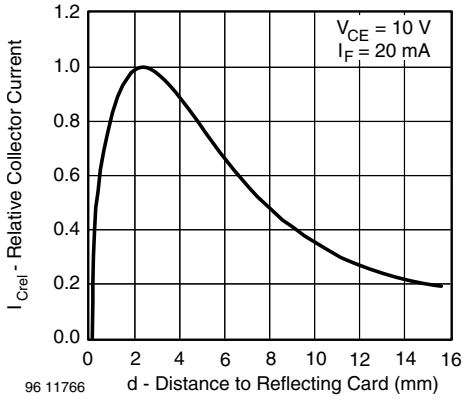

Fig. 9 - Relative Collector Current vs. Distance

PACKAGE DIMENSIONS in millimeters, **TCRT5000**

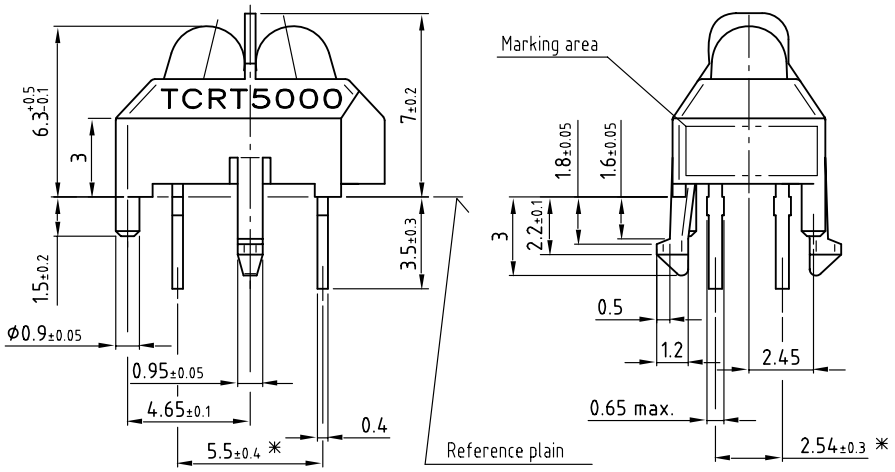

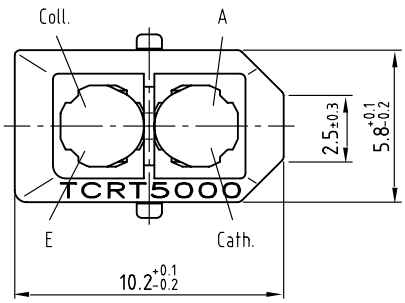

✳ Tolerances related to reference plain

weight: ca. 0.23g

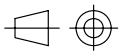

technical drawings according to DIN specifications

Footprint Top View

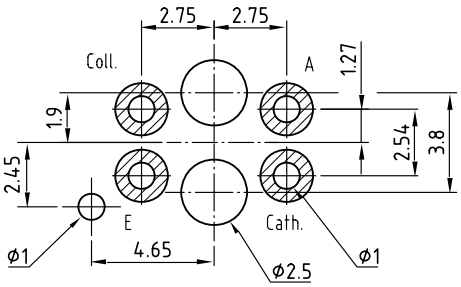

Drawing-No.: 6.550-5096.01-4
Issue: 4; 11.04.02
96 12073

PACKAGE DIMENSIONS in millimeters, **TCRT5000L**

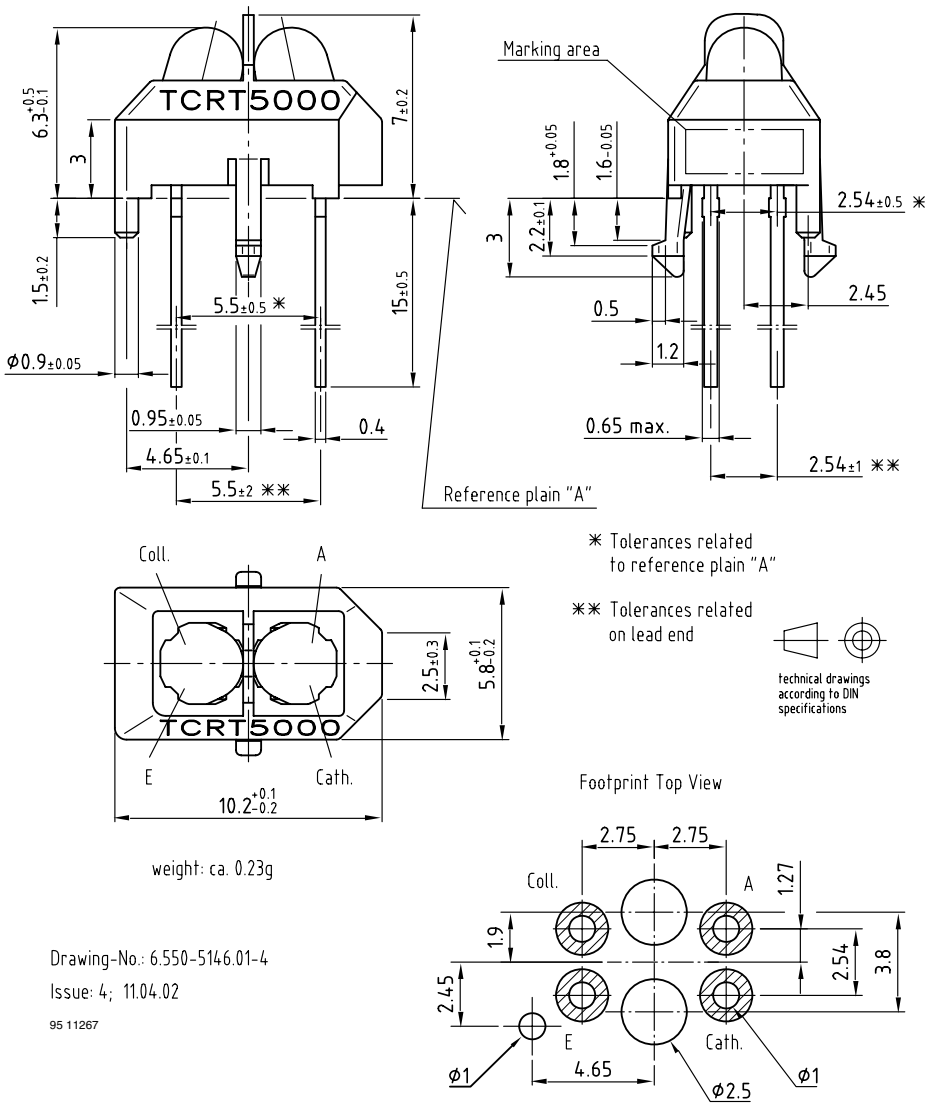

TUBE DIMENSIONS in millimeters, **TCRT5000**

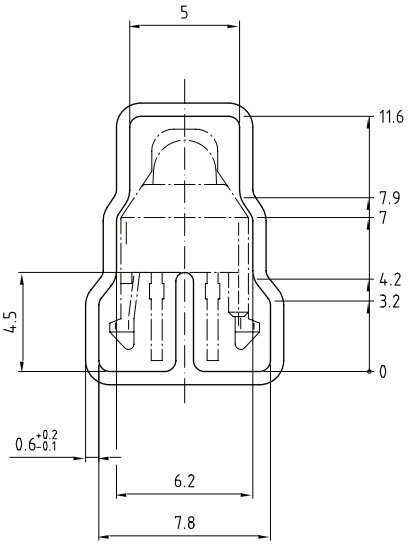

With rubber stopper
Tolerance: ±0.5mm
Length: 575±1mm

Drawing-No.: 9.700-5139.01-4
Issue: 1; 10.05.00
20298

TUBE DIMENSIONS in millimeters, **TCRT5000L**

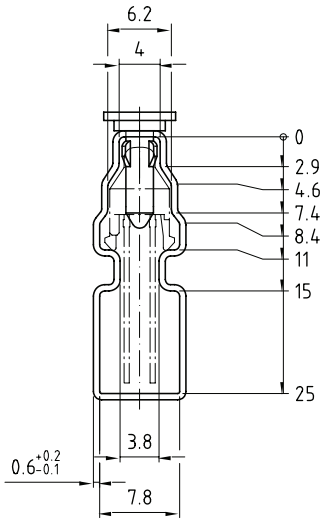

With stopper pins
Tolerance: ±0.5mm
Length: 575±1mm

Drawing-No.: 9.700-5178.01-4
Issue: 1; 25.02.00
20299

Disclaimer

ALL PRODUCT, PRODUCT SPECIFICATIONS AND DATA ARE SUBJECT TO CHANGE WITHOUT NOTICE TO IMPROVE RELIABILITY, FUNCTION OR DESIGN OR OTHERWISE.

Vishay Intertechnology, Inc., its affiliates, agents, and employees, and all persons acting on its or their behalf (collectively, "Vishay"), disclaim any and all liability for any errors, inaccuracies or incompleteness contained in any datasheet or in any other disclosure relating to any product.

Vishay makes no warranty, representation or guarantee regarding the suitability of the products for any particular purpose or the continuing production of any product. To the maximum extent permitted by applicable law, Vishay disclaims (i) any and all liability arising out of the application or use of any product, (ii) any and all liability, including without limitation special, consequential or incidental damages, and (iii) any and all implied warranties, including warranties of fitness for particular purpose, non-infringement and merchantability.

Statements regarding the suitability of products for certain types of applications are based on Vishay's knowledge of typical requirements that are often placed on Vishay products in generic applications. Such statements are not binding statements about the suitability of products for a particular application. It is the customer's responsibility to validate that a particular product with the properties described in the product specification is suitable for use in a particular application. Parameters provided in datasheets and/or specifications may vary in different applications and performance may vary over time. All operating parameters, including typical parameters, must be validated for each customer application by the customer's technical experts. Product specifications do not expand or otherwise modify Vishay's terms and conditions of purchase, including but not limited to the warranty expressed therein.

Except as expressly indicated in writing, Vishay products are not designed for use in medical, life-saving, or life-sustaining applications or for any other application in which the failure of the Vishay product could result in personal injury or death. Customers using or selling Vishay products not expressly indicated for use in such applications do so at their own risk and agree to fully indemnify and hold Vishay and its distributors harmless from and against any and all claims, liabilities, expenses and damages arising or resulting in connection with such use or sale, including attorneys fees, even if such claim alleges that Vishay or its distributor was negligent regarding the design or manufacture of the part. Please contact authorized Vishay personnel to obtain written terms and conditions regarding products designed for such applications.

No license, express or implied, by estoppel or otherwise, to any intellectual property rights is granted by this document or by any conduct of Vishay. Product names and markings noted herein may be trademarks of their respective owners.