4.5 TO 24 VDC UNIPOLAR DEVICE

SR3F-A1

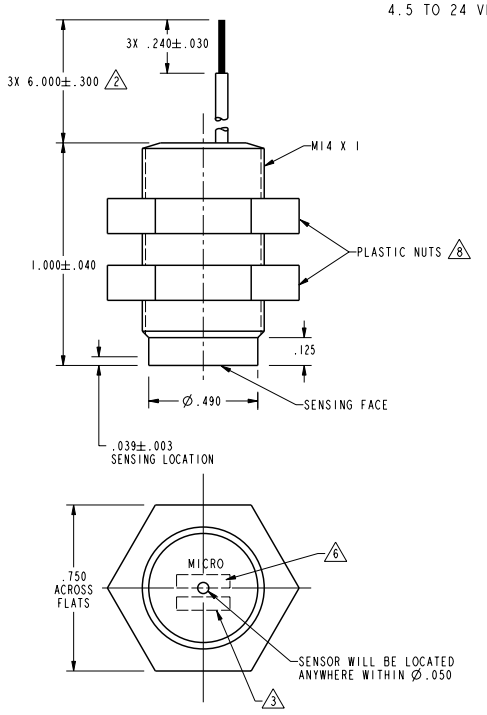

FIG. 1

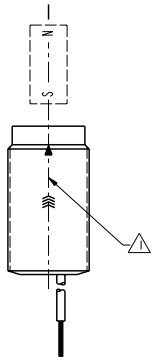

FIG. 2
OPERATE

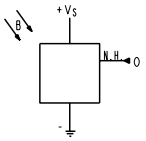

SWITCH SYMBOL

MAGNETIC CHARACTERISTICS 1 5

OPERATE MAX	450
RELEASE MIN	170
DIFF MIN	20

(TEMP RANGE -40° C TO 85° C)

ABSOLUTE MAXIMUM RATINGS 9

SUPPLY VOLTAGE (V_S) 7	-28 VDC TO +28 VDC
VOLTAGE EXTERNALLY APPLIED TO OUTPUT	+28 VOLTS DC MAX WITH SWITCH IN "OFF" CONDITION ONLY -0.5 VOLTS DC MIN WITH SWITCH IN "OFF" OR "ON" CONDITION
OUTPUT CURRENT	20 mA
TEMPERATURE OPERATE AND STORAGE	-40° C TO 125° C
MAGNETIC FLUX	NO LIMIT, THE CIRCUIT CANNOT BE DAMAGED BY MAGNETIC OVERDRIVE

ELECTRICAL CHARACTERISTICS

	MIN	TYP	MAX	REMARKS
SUPPLY CURRENT 4		8 mA	18.0 mA	V_S = 4.5-24 VOLTS 7
OUTPUT VOLTAGE 5 (OPERATED)		0.15 V	0.4 V	SINKING 10 mA PER OUTPUT
OUTPUT LEAKAGE 5 CURRENT (RELEASED)			10 μA	LEAKAGE INTO SWITCH OUTPUT
OUTPUT SWITCHING TIME 5 RISE TIME FALL TIME		 0.2 μSEC 0.1 μSEC	 1.5 μSEC 1.5 μSEC	 10% TO 90% 90% TO 10%

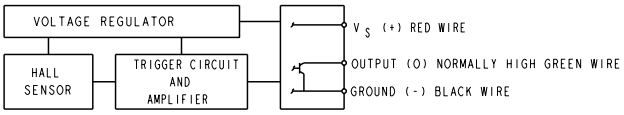

BLOCK DIAGRAM SHOWING CURRENT SINKING OUTPUTS

NOTES

1. FLUX ENTERING THE SOUTH POLE OF THE MAGNET WILL OPERATE THE SENSOR WHEN MAGNET IS POSITIONED AS SHOWN IN FIGURE 2. THIS ASSUMES THE CONVENTION THAT THE DIRECTION OF THE EXTERNAL FLUX OF A MAGNET IS FROM THE NORTH TO THE SOUTH POLE OF THE MAGNET
2. LEADWIRES (INDIVIDUAL WIRES) ARE 24 GAGE STRANDED WITH XLPE INSULATION
3. DATE CODE LOCATED IN THIS AREA
4. AT 24 ± 2° C
5. AT SUPPLY VOLTAGE OF 4.5 TO 24 VOLTS AND FULL TEMPERATURE RANGE
6. CATALOG LISTING LOCATED IN THIS AREA
7. Vs IS THE UNREGULATED SUPPLY VOLTAGE
8. TORQUE ON PLASTIC NUTS MUST NOT EXCEED 12 INCH POUNDS
9. ABSOLUTE MAXIMUM RATINGS ARE THE EXTREME LIMITS THAT THE DEVICE WILL WITHSTAND WITHOUT DAMAGE TO THE DEVICE. HOWEVER, THE ELECTRICAL AND MAGNETIC CHARACTERISTICS ARE NOT GUARENTEED AS THE MAXIMUM LIMITS (ABOVE RECOMMENDED OPERATING CONDITIONS) ARE APPROACHED, NOR WILL THE DEVICE NECESSARILY OPERATE AT ABSOLUTE MAXIMUM RATING

CAUTION ELECTROSTATIC SENSITIVE DEVICES DO NOT OPEN OR HANDLE EXCEPT AT A STATIC FREE WORKSTATION

ESD SENSITIVITY: CLASS 3

THIRD ANGLE PROJECTION

SCALE 3:1

DO NOT SCALE PRINT

UNLESS OTHERWISE SPECIFIED TOLERANCES ARE

ONE PLACE	(.0)	±.030
TWO PLACES	(.00)	±.015
THREE PLACES	(.000)	±.005
ANGLES		±

WEIGHT

THIS DRAWING COVERS A PROPRIETARY ITEM AND IS THE PROPERTY OF MICRO SWITCH, A DIVISION OF HONEYWELL. THIS DRAWING IS NOT TO BE COPIED OR USED WITHOUT THE APPROVAL OF MICRO SWITCH.

MICRO SWITCH a Honeywell Division
FED. MFG. CODE 91929

MAGNETICALLY OPERATED CYLINDRICAL HALL SWITCH

CATALOG LISTING
SR3F-A1

ANSI Y14.5M-1982 APPLIES

PTC/CAD 20	DRAWN WLS	30NOV89	CHECK	DAW	27DEC89	CHECK		CHECK	REVISIONS A 201747 JLY 90V00	ISSUE 9	DRAWING NUMBER SR3F-A1 SHEET 1 OF 1 RELEASE NO. DR-3167 REPLACES

Downloaded from Elcodis.com electronic components distributor