ISSUE	REVISIONS	DRAWN	DATE
△			

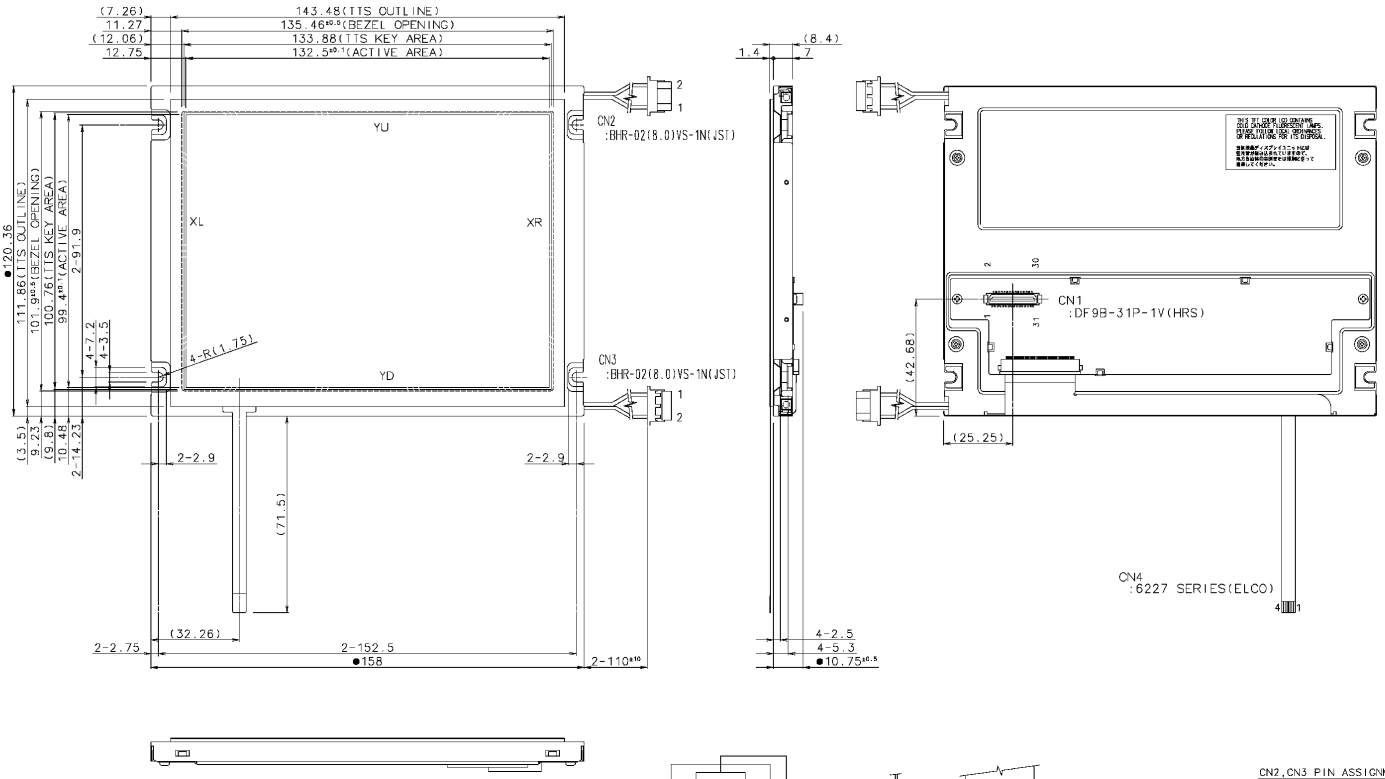

CN1 PIN ASSIGNMENT

No.	SYMBOL
1	GND
2	DCLK
3	HD
4	VD
5	GND
6	R0
7	R1
8	R2
9	R3
10	R4
11	R5
12	GND
13	G0
14	G1
15	G2
16	G3
17	G4
18	G5
19	GND
20	B0
21	B1
22	B2
23	B3
24	B4
25	B5
26	GND
27	DENA
28	VCC
29	VCC
30	TEST
31	REV

CN2,CN3 PIN ASSIGNMENT

No.	SYMBOL
1	H.V
2	L.V

CN4 PIN ASSIGNMENT

No.	SYMBOL	No.	SYMBOL
1	XL	3	XR
2	YD	4	YU

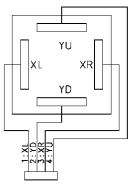

TTS CIRCUIT DIAGRAM

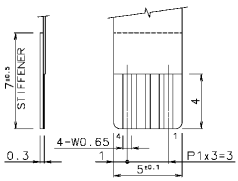

DETAIL CN4(S=5:1)

TOLERANCE			
MEASURE	A	B	C
L≤16	±0.1	±0.3	±1
16<L≤63	±0.2	±0.5	±1.5
63<L≤250	±0.3	±0.8	±2
250<L≤500	±0.5	±1.2	±3
500<L	±0.8	±2	±4
ANGLE	±1°	±5°	±10°

NOTES

1) THE DIMENSIONS WITH THE MARK (●) ARE CONTROLLED AS A PARTICULAR CHARACTERISTIC.
2) DON'T USE MATERIAL WHICH ARE PROHIBITED BY RoHS.

MATERIAL:		FINISH:	
DATE 2008/06/25	THIRD ANGLE PROJECTION	OPTREX CORPORATION	
APPROVED Noboru Wada	SCALE 1:1	UNIT mm	TITLE DIMENSIONAL OUTLINE
CHECKED Yasuo Yamaguchi	DATE AUG.04'08	DWG NO(CODE) T-51750AP base	
DRAWN Satoshi Sano	DSGN S.Sano	DWG SIZE A2	DWG REV

Confidential

Downloaded from Elcodis.com electronic components distributor