REV.	DATE	ECR NO.	DESCRIPTION
NC	09/09/10	XXXXXX	INITIAL RELEASE

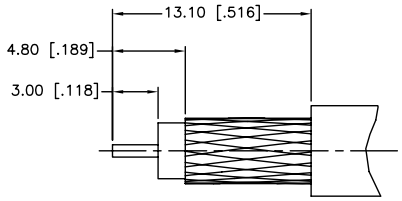

RECOMMENDED
CABLE STRIPPING DIM'S

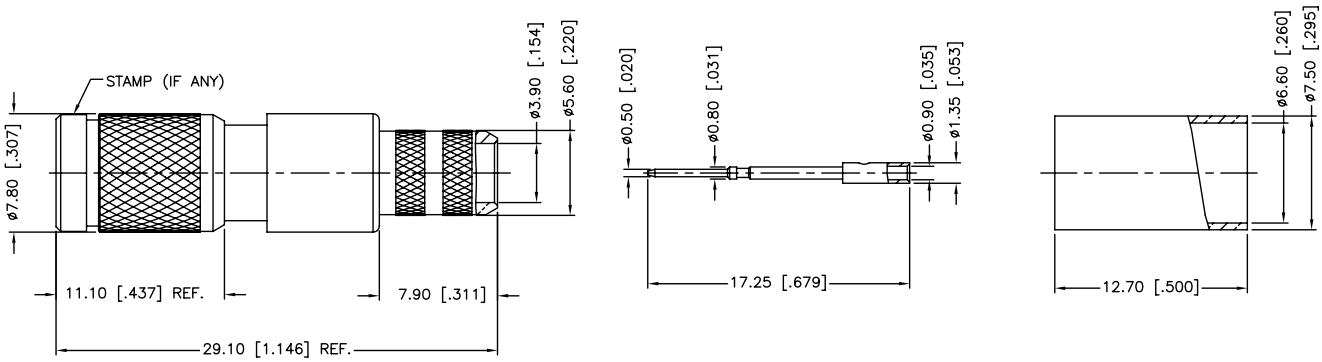

1. FREQUENCY RANGE: DC – 3 GHz
2. VSWR (RETURN LOSS): 1.15, MAX.
3. CRIMPED FERRULE
   HEX CRIMP SIZE .255"
4. CRIMPED CONTACT PIN
   HEX CRIMP SIZE .043"

	DESCRIPTION	MATERIAL	FINISH	QTY
8	FERRULE	BRASS	NICKEL	1
7	CONTACT PIN	BRASS	GOLD	1
6	BARREL	BRASS	NICKEL	1
5	OUT CONTACT	BER. COPPER	GOLD	1
4	INSULATOR	PTFE	NATURAL	1
3	SPRING	SUS 301H	PASSIVATED	1
2	BODY	BRASS	NICKEL	1
1	SHELL	BRASS	NICKEL	1

UNLESS OTHERWISE SPECIFIED DIMENSIONS ARE IN MILLIMETERS. DIMENSIONS IN [ ] ARE IN INCHES AND FOR CUSTOMER REFERANCE ONLY.

UNLESS OTHERWISE SPECIFIED TOLERANCES FOR MILLIMETERS ARE:
0.5 – 8mm ± 0.20mm
8 – 30mm ± 0.40mm
30 – 120mm ± 0.50mm

UNLESS OTHERWISE SPECIFIED TOLERANCES FOR INCHES ARE:
.020 – .315 = ± 0.007"
.315 – 1.180 = ± 0.015"
1.180 – 4.724 = ± 0.020"

DO NOT SCALE DRAWING

APPROVALS		DATE
DRAWN	M.ZHANG	09/09/10
CHECKED		
ISSUED		
SHEET	1 OF 1	

CAD FILE C:/CONNEX/282135–75.DWG

Amphenol Connex

PART DESCRIPTION
1.0/2.3 PUSH–PULL CRIMP PLUG
(FOR BELDEN 1505A CABLE)

PART NO. 282135–75

DWG. NO. 282135–75.DWG | REV. NC | SIZE A | SCALE NA

Downloaded from Elcodis.com electronic components distributor