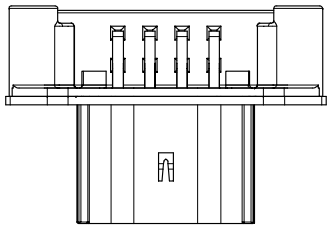

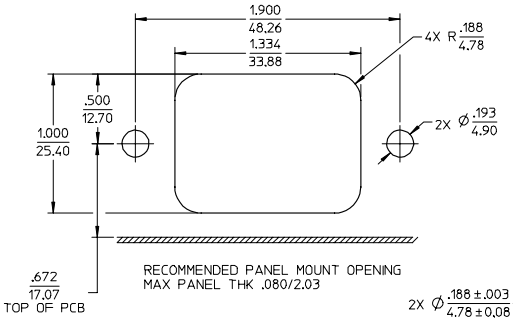

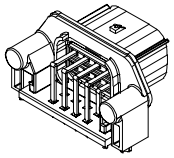

ASSEMBLED VIEW
1:1 SCALE

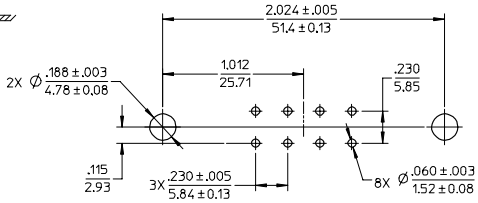

RECOMMENDED PCB LAYOUT
COMPONENTS SIDE
TOLERANCES ARE NON-ACCUMULATIVE

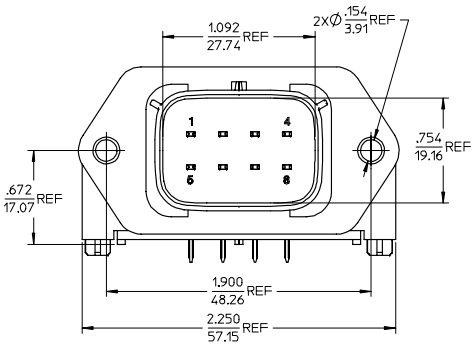

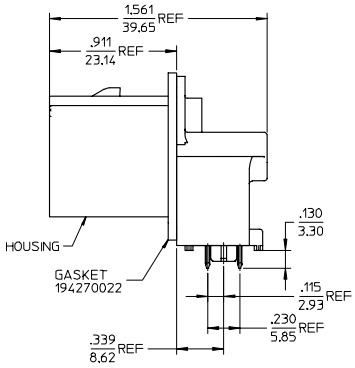

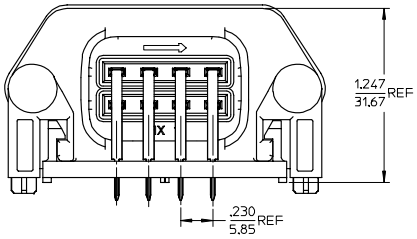

NOTES:

1. MATERIALS:
   HOUSING: POLYESTER (PBT), GLASS FILLED, UL94 V-0.
   COLOR: BLACK
   TERMINALS: COPPER ALLOY
2. FINISHES: 1. TIN ONLY: 100µIN TIN OVER 50µIN NICKEL
   2. TIN/GOLD: 30µIN SELECT GOLD (CONTACT MATING AREA),
   100µIN SELECT TIN (PCB TAIL AREA) OVER 50µIN NICKEL OVERALL.
3. PRODUCT SPECIFICATION: PS-19427-001.
4. PACKAGING SPECIFICATION: PK-19427-001.
5. MATES WITH: 19418 SERIES RECEPTACLE ASSEMBLIES.
6. RECOMMENDED MOUNTING HARDWARE: (2)#10 X .62/18.9 LONG PLASTIC THREAD CUTTING SCREWS. RECOMMENDED TORQUE 15-17 IN-LBS. SUGGESTED SOURCE: ITW SHAKEPROOF INDUSTRIAL BOSSCREW OR EQUIVALENT.

MATERIAL NO.	TERMINAL PLATING
194270017	TIN
194270105	TIN/GOLD

REV	DESCRIPTION
B	REVISED EC NO: ETC2006-0028 2005/10/10 DRWN:JPAWLICK 2005/10/11 CHKD:JPAWLICK 2005/10/11 APPR:RDEROSS 2005/10/11

QUALITY SYMBOLS
▼=0
▽=0

GENERAL TOLERANCES (UNLESS SPECIFIED)

	mm	INCH
4 PLACES	± ---	± ---
3 PLACES	± ---	± .015
2 PLACES	± 0.38	± ---
1 PLACE	± ---	± ---
ANGULAR ± 1 °		

DRAFT WHERE APPLICABLE MUST REMAIN WITHIN DIMENSIONS

DIMENSION STYLE: IN/MM
SCALE: 2:1
DESIGN UNITS: INCH
THIRD ANGLE PROJECTION

		DATE
DRAWN BY	BRUPERT	04/07/28
CHECKED BY	JPAWLICK	04/07/28
APPROVED BY	RDEROSS	04/07/28

TITLE: 8 WAY RIGHT ANGLE HEADER ASSEMBLY

molex MOLEX INCORPORATED

MATERIAL NO.: SEE CHART
DOCUMENT NO.: SD-19427-022
SHEET NO.: 1 OF 1
SIZE: C

THIS DRAWING CONTAINS INFORMATION THAT IS PROPRIETARY TO MOLEX INCORPORATED AND SHOULD NOT BE NOT BE USED WITHOUT WRITTEN PERMISSION

tb_frame_C_P_AM_T
Rev. D 2004/06/28

Downloaded from Elcodis.com electronic components distributor