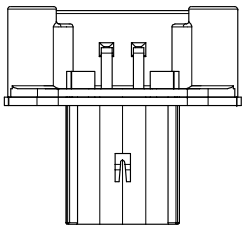

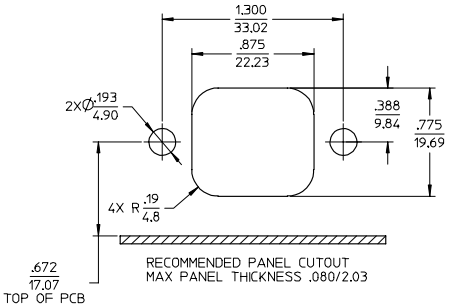

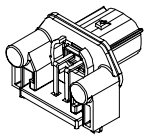

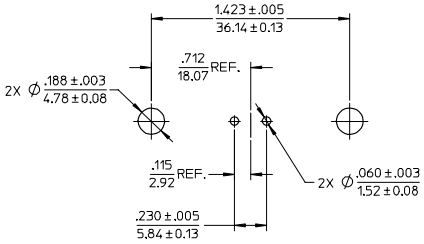

RECOMMENDED PCB LAYOUT
COMPONENT SIDE

TOLERANCES ARE NON-ACCUMULATIVE

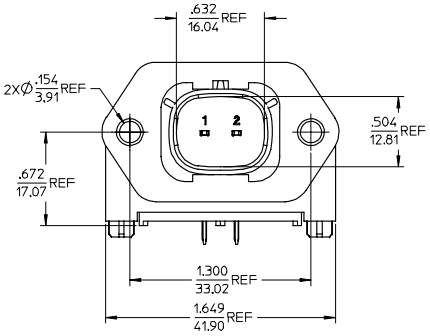

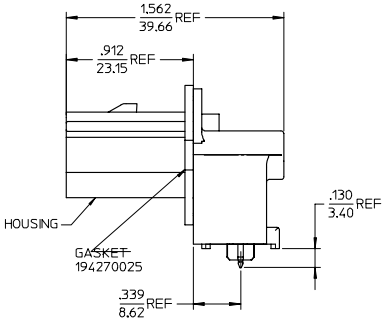

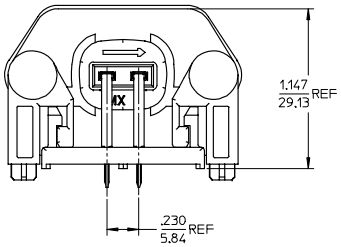

NOTES:

1. MATERIALS:
   HOUSING: POLYESTER (PBT), GLASS FILLED, UL94 V-0.
   COLOR: BLACK
   TERMINALS: COPPER ALLOY
2. FINISHES: 1. TIN ONLY: 100µIN TIN OVER 50µIN NICKEL
   2. TIN/GOLD: 30µIN SELECT GOLD (CONTACT MATING AREA), 100µIN SELECT TIN (PCB TAIL AREA) OVER 50µIN NICKEL OVERALL.
3. PRODUCT SPECIFICATION: PS-19427-001.
4. PACKAGING SPECIFICATION: PK-19427-001.
5. MATES WITH: 19418 SERIES RECEPTACLE ASSEMBLIES.
6. RECOMMENDED MOUNTING HARDWARE: (2)#10 X .62/18.9 LONG PLASTIC THREAD CUTTING SCREWS. RECOMMENDED TORQUE 15-17 IN-LBS. SUGGESTED SOURCE: ITW SHAKEPROOF INDUSTRIAL BOSSCREW OR EQUIVALENT.

MATERIAL NO.	PLATING
194270040	TIN
194270109	SELECT GOLD/TIN

REV	DESCRIPTION
B	REVISED EC NO: ETC2006-0028 2005/10/10 DRWN:JPAWLICK 2005/10/11 CHKD:JPAWLICK 2005/10/11 APPR:RDEROSS 2005/10/11

QUALITY SYMBOLS: ▼=0 ▽=0

GENERAL TOLERANCES (UNLESS SPECIFIED)	mm	INCH
4 PLACES	± ---	± ---
3 PLACES	± ---	± .015
2 PLACES	± 0.38	± ---
1 PLACE	± ---	± ---
ANGULAR ± 1 °		

DRAFT WHERE APPLICABLE MUST REMAIN WITHIN DIMENSIONS

DIMENSION STYLE: IN/MM

DRAWN BY	JLOMASTR	DATE 04/07/22
CHECKED BY	JPAWLICK	DATE 04/07/24
APPROVED BY	RDEROSS	DATE 04/07/28
MATERIAL NO.	SEE CHART	

SCALE 2:1 | DESIGN UNITS INCH | THIRD ANGLE PROJECTION

TITLE: 2 WAY RIGHT ANGLE HEADER ASSEMBLY

molex MOLEX INCORPORATED

DOCUMENT NO. SD-19427-018 | SHEET NO. 1 OF 1

SIZE C

THIS DRAWING CONTAINS INFORMATION THAT IS PROPRIETARY TO MOLEX INCORPORATED AND SHOULD NOT BE NOT BE USED WITHOUT WRITTEN PERMISSION

tb_frame_C_P_AM_T
Rev. D 2004/06/28

Downloaded from Elcodis.com electronic components distributor