THIS DRAWING IS UNPUBLISHED. RELEASED FOR PUBLICATION
© COPYRIGHT – BY TYCO ELECTRONICS CORPORATION. ALL RIGHTS RESERVED.

LOC	DIST	REVISIONS				
P	LTR	DESCRIPTION	DATE	DWN	APVD
G	ECO-07-016583	11DEC07	MB	JO

1. HOUSING: FLAME RETARDANT THERMOPLASTIC; COLOR: BLACK.
2. POST: COPPER ALLOY.
3. POST FINISH: 0.00076 [.000030] GOLD IN AREA G, 0.00038 [.000015] GOLD IN AREA H, ALL OVER 0.00127 [.000050] NICKEL.
4. POINT OF MEASUREMENT FOR PLATING THICKNESS.
5. RECESSED DATE CODE.
6. CSA LOGO RECESS STAMPED ON HOUSING.

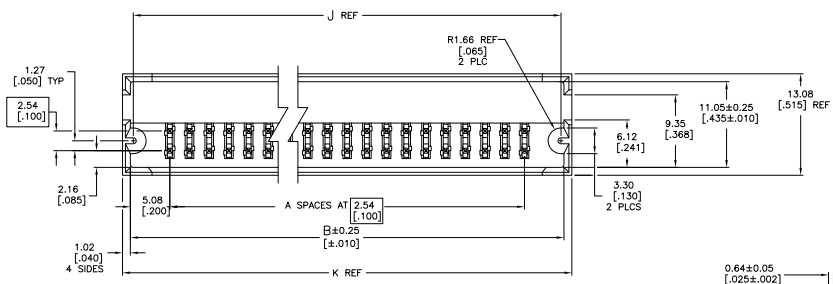

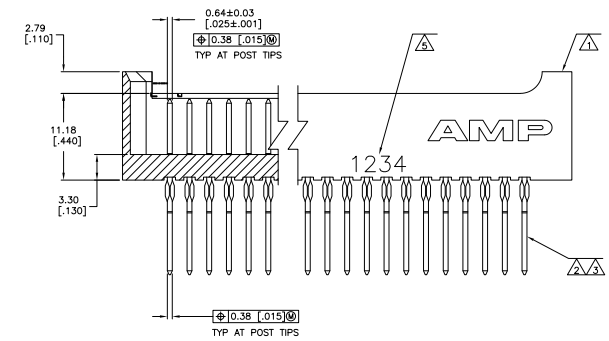

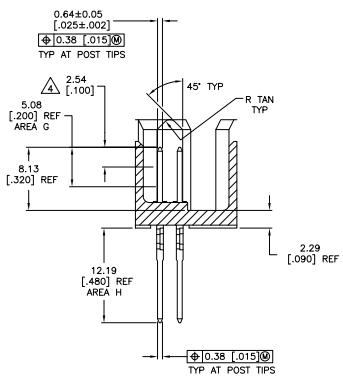

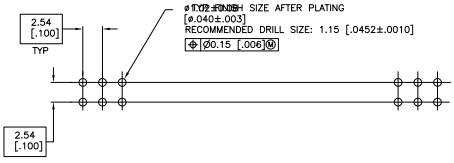

RECOMMENDED MOUNTING HOLE LAYOUT

SECTION Z–Z
ROTATED 90° CW

	K	J	B	A	NO OF POSN	PART NUMBER
OBSOLETE						2–102666–8
						2–102666–7
						2–102666–6
						2–102666–5
						2–102666–4
						2–102666–3
						2–102666–2
						2–102666–1
	187.45 [7.380]	184.66 [7.270]	185.42 [7.300]	69	140	2–102666–0
						1–102666–9
						1–102666–8
						1–102666–7
						1–102666–6
						1–102666–5
						1–102666–4
						1–102666–3
						1–102666–2
	162.05 [6.380]	159.26 [6.270]	160.02 [6.300]	59	120	1–102666–1
OBSOLETE						1–102666–0
	174.75 [6.880]	171.96 [6.770]	172.72 [6.800]	64	130	102666–9
OBSOLETE	136.65 [5.380]	133.86 [5.270]	134.62 [5.300]	49	100	102666–8
						102666–7
						102666–6
						102666–5
						102666–4
						102666–3
						102666–2
						102666–1

THIS DRAWING IS A CONTROLLED DOCUMENT.

DIMENSIONS: mm [INCHES]

TOLERANCES UNLESS OTHERWISE SPECIFIED: 0 PLC ± – ; 1 PLC ± – ; 2 PLC ± 0.13 [.005] ; 3 PLC ± – ; 4 PLC ± – ; ANGLES ± –

MATERIAL: MODEL 1 ; FINISH: POST: 2

DR: K.L.CLOUSER/UTA 02APR01
CK: D SARVER 18JUN01
APVD: D SARVER 18JUN01
PRODUCT SPEC: –
APPLICATION SPEC: –
WEIGHT: –
CUSTOMER DRAWING

Tyco Electronics
Tyco Electronics Corporation
Harrisburg, Pa 17105-3608

NAME: HEADER ASSY, MOD II, DOUBLE ROW,2.54 X 2.54 [.100 X .100] CL, 0.64 [.025] SQ COMPLIANT POST, FOR BOARDS 2.36 [.093] NOM & THICKER

SIZE: A1 | CAGE CODE: 00779 | DRAWING NO: C-102666 | RESTRICTED TO: –
SCALE: 4:1 | SHEET 1 OF 1 | REV: G

AMP 4805 REV 31MAR2000

Downloaded from Elcodis.com electronic components distributor