THIS DRAWING IS UNPUBLISHED. RELEASED FOR PUBLICATION -.-.-
© COPYRIGHT - BY TYCO ELECTRONICS CORPORATION. ALL INTERNATIONAL RIGHTS RESERVED.

LOC	DIST
GP	00

REVISIONS

P	LTR	DESCRIPTION	DATE	DWN	APVD
	T	REVISED PER ECO-08-004045	26MAR08	JDP	SLB

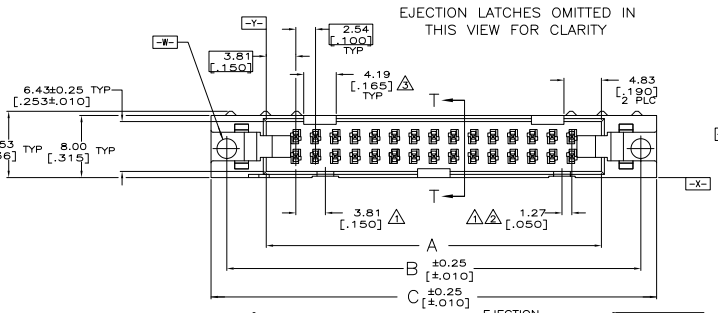

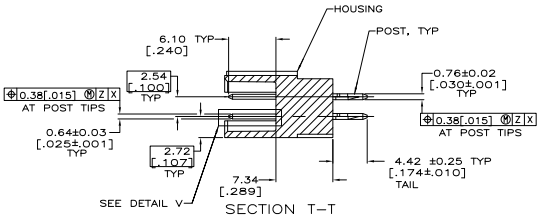

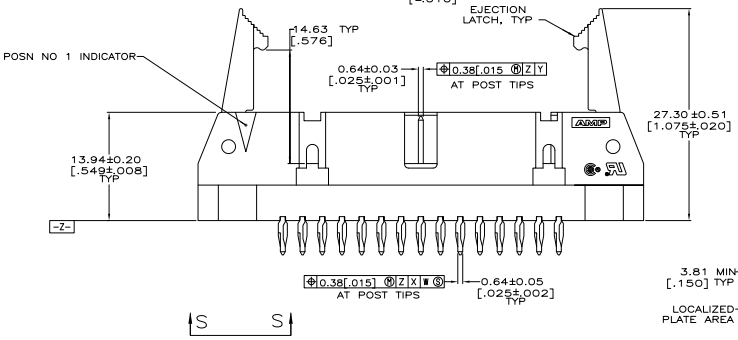

1. COORDINATE DIMENSION APPLIES FROM BASIC LOCATION.
2. 10 AND 14 POSITION SIZES CONTAIN ONLY ONE SLOT FOR SNAP-IN POLARIZER (MILITARY POLARIZATION) LOCATED AS SHOWN.
3. 10 POSITION SIZES CONTAIN ONLY ONE SLOT FOR DUAL POLARIZATION, LOCATED AS SHOWN.
4. REFER TO APPLICATION SPECIFICATION 114-40020 FOR HOLE SIZE AND FINISH RECOMMENDATIONS.
5. DISTANCE REQUIRED BY EJECTION LATCHES IN THE OPEN POSITION.
6. POSTS: GOLD FLASH OVER PALLADIUM-NICKEL PLATE, 0.76μm[.000030] MIN TOTAL ON THE LOCALIZED PLATE AREA, 2.54μm[.000100] MIN TIN-LEAD PLATE ON THE TAIL, 1.27μm[.000050] MIN NICKEL UNDERPLATE ON THE ENTIRE POST.
   -OR-
   0.76μm[.000030] MIN GOLD PLATE ON THE LOCALIZED PLATE AREA, 2.54μm[.000100] MIN TIN-LEAD PLATE ON THE TAIL, 1.27μm[.000050] MIN NICKEL UNDERPLATE ON THE ENTIRE POST.

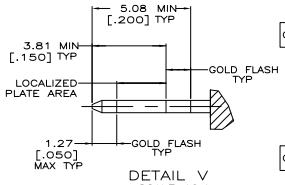

			E	D	C	B	A	NO OF POSN	PART NUMBER
OBSOLETE	–	–	53.34 [2.100]	71.12 [2.800]	75.18 [2.960]	71.12 [2.800]	60.96 [2.400]	44	1-746443-3
	1-499582-2	102320-1	78.74 [3.100]	96.52 [3.800]	100.58 [3.960]	96.52 [3.800]	86.36 [3.400]	64	1-746443-2
	–	–	73.66 [2.900]	91.44 [3.600]	95.50 [3.760]	91.44 [3.600]	81.28 [3.200]	60	1-746443-1
	–	–	60.96 [2.400]	78.74 [3.100]	82.80 [3.260]	78.74 [3.100]	68.58 [2.700]	50	1-746443-0
	–	–	48.26 [1.900]	66.04 [2.600]	70.10 [2.760]	66.04 [2.600]	55.88 [2.200]	40	746443-9
OBSOLETE	–	–	40.64 [1.600]	58.42 [2.300]	62.48 [2.460]	58.42 [2.300]	48.26 [1.900]	34	746443-8
	499582-7	102320-1	35.56 [1.400]	53.34 [2.100]	57.40 [2.260]	53.34 [2.100]	43.18 [1.700]	30	746443-7
	–	–	30.48 [1.200]	48.26 [1.900]	52.32 [2.060]	48.26 [1.900]	38.10 [1.500]	26	746443-6
	499582-5	102320-1	27.94 [1.100]	45.72 [1.800]	49.78 [1.960]	45.72 [1.800]	35.56 [1.400]	24	746443-5
OBSOLETE	–	–	22.86 [.900]	40.64 [1.600]	44.70 [1.760]	40.64 [1.600]	30.48 [1.200]	20	746443-4
	–	–	17.78 [.700]	35.56 [1.400]	39.62 [1.560]	35.56 [1.400]	25.40 [1.000]	16	746443-3
	488582-2	102320-1	15.24 [.600]	33.02 [1.300]	37.08 [1.460]	33.02 [1.300]	22.86 [.900]	14	746443-2
	–	–	10.16 [.400]	27.94 [1.100]	32.00 [1.260]	27.94 [1.100]	17.78 [.700]	10	746443-1
HEADER ASSY QTY:1		LATCH QTY:2							
SUPERSEDED BY									

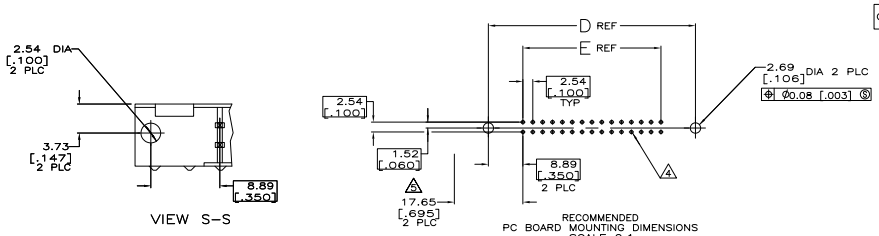

THIS DRAWING IS A CONTROLLED DOCUMENT.

DIMENSIONS: mm [INCHES]

TOLERANCE UNLESS OTHERWISE SPECIFIED: 0 PLC ± – ; 1 PLC ± – ; 2 PLC ± 0.13[.005] ; 3 PLC ± – ; 4 PLC ± – ; ANGLES ± –

MATERIAL: HOUSING & POSTS: SEE FILMS PLATING: SEE FILMS, PLTG. & FINISH, BLACK PARTS, PHOSPHOR BRONZE

FINISH: 6

TSR	H. MOLL	9-24-90
DR	R. STONE	9-28-90
APVD	R. KILE	10-2-90

PRODUCT SPEC: 108-40018

APPLICATION SPEC: 114-40020

WEIGHT: –

CUSTOMER DRAWING

Tyco Electronics Corporation, Harrisburg, PA 17105-3608

NAME: HEADER ASSY, UNIVERSAL, AMP-LATCH

SIZE: A1 | CAGE CODE: 00779 | DRAWING NO: C-746443 | RESTRICTED TO: –

SCALE: 4:1 | SHEET 1 OF 1 | REV T

4805 (1/98)

Downloaded from Elcodis.com electronic components distributor