THIS DRAWING IS UNPUBLISHED. RELEASED FOR PUBLICATION -.-.-
© COPYRIGHT - BY TYCO ELECTRONICS CORPORATION. ALL RIGHTS RESERVED.

UOC	DIST
CM	00

REVISIONS

P	LTR	DESCRIPTION	DATE	DWN	APVD
	A1	REVISED PER ECO-08-031186	15DEC08	HMR	CC

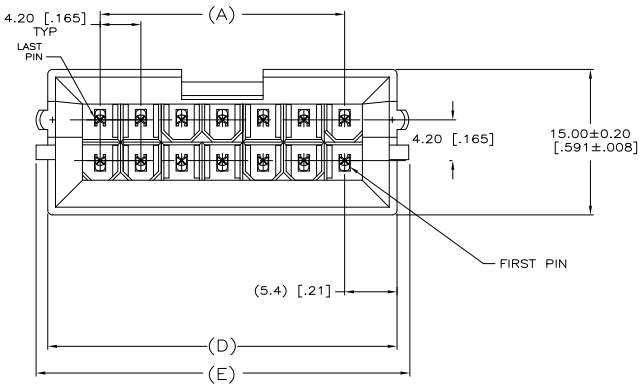

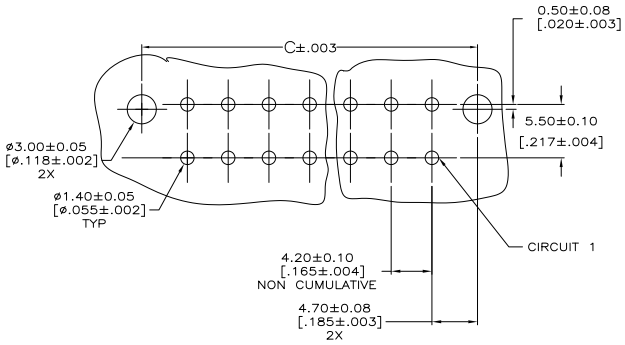

RECOMMENDED HOLE LAYOUT FOR 1.78 [.070] MAXIMUM THICK PC BOARD.

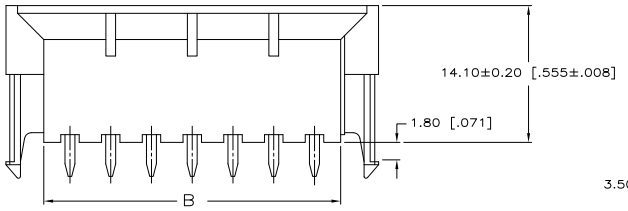

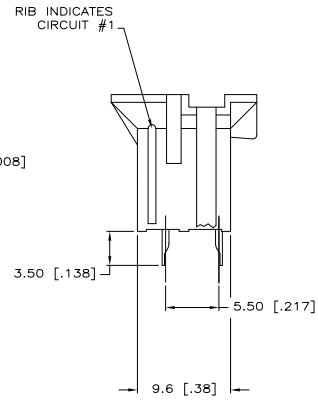

1. MATERIAL: HOUSING–NYLON, UL94V–0 (COLOR–NATURAL, COLOR OF PARTS MAY VARY). CONTACTS–0.25 [.010] THICK BRASS ALLOY
2. CONTACT FINISH: 0.000100 [.0000039] MIN. MATTE TIN OVER 0.000050 [.0000020] MIN. NICKEL OVER ENTIRE CONTACT.
3. MATES WITH 4.2mm P.E. RECEPTACLE HOUSINGS.

(E)	(D)	C	B	(A)	POS	PART NUMBER
59.4 [2.32]	57.0 [2.24]	55.6 [2.19]	51.6 [2.03]	46.2 [1.82]	24	2–1586587–4
55.2 [2.17]	52.0 [2.08]	51.4 [2.02]	47.4 [1.87]	42.0 [1.65]	22	2–1586587–2
51.0 [2.01]	48.6 [1.91]	47.2 [1.86]	43.2 [1.70]	37.8 [1.49]	20	2–1586587–0
46.8 [1.84]	44.4 [1.75]	43.0 [1.69]	39.0 [1.54]	33.6 [1.32]	18	1–1586587–8
42.6 [1.69]	40.2 [1.58]	38.8 [1.53]	34.8 [1.37]	29.4 [1.58]	16	1–1586587–6
38.4 [1.51]	36.0 [1.42]	34.6 [1.36]	30.6 [1.20]	25.2 [0.99]	14	1–1586587–4
34.2 [1.35]	31.8 [1.25]	30.4 [1.20]	26.4 [1.04]	21.0 [0.83]	12	1–1586587–2
30.0 [1.18]	27.6 [1.09]	26.2 [1.03]	22.2 [.87]	16.8 [0.66]	10	1–1586587–0
25.8 [1.02]	23.4 [.92]	22.0 [0.87]	18.0 [.71]	12.6 [0.50]	8	1586587–8
21.6 [.85]	19.2 [.76]	17.8 [0.70]	13.8 [54]	8.4 [0.33]	6	1586587–6
17.4 [.69]	15.0 [.59]	13.6 [0.54]	9.6 [.38]	4.2 [0.17]	4	1586587–4
13.2 [.52]	10.8 [.43]	9.4 [.37]	5.4 [.21]	——	2	1586587–2

METRIC

THIS DRAWING IS A CONTROLLED DOCUMENT.

DRAWN S. HOOVER 12–NOV–2004
CHK D. COLEY 12–NOV–2004
APVD D. COLEY 12–NOV–2004

DIMENSIONS: mm [INCHES]
TOLERANCE UNLESS OTHERWISE SPECIFIED: 0 PLC ±; 1 PLC ±; 2 PLC ±; 3 PLC ±0.13 [.005]; 4 PLC ±; ANGLES ±0.25°
MATERIAL 1
FINISH 2

PRODUCT SPEC
APPLICATION SPEC
WEIGHT
CUSTOMER DRAWING

Tyco Electronics Corporation
Harrisburg, PA 17105–3608

NAME: VERTICAL HEADER ASSEMBLY – BLINDMATE WITH DRAIN HOLES, V0, VAL–U–LOK(TM)

SIZE A1 | CAGE CODE 00779 | DRAWING NO C–1586587 | RESTRICTED TO
SCALE 5:1 | SHEET 1 OF 1 | REV A1

AMP 4805 REV 31MR2000

Downloaded from Elcodis.com electronic components distributor