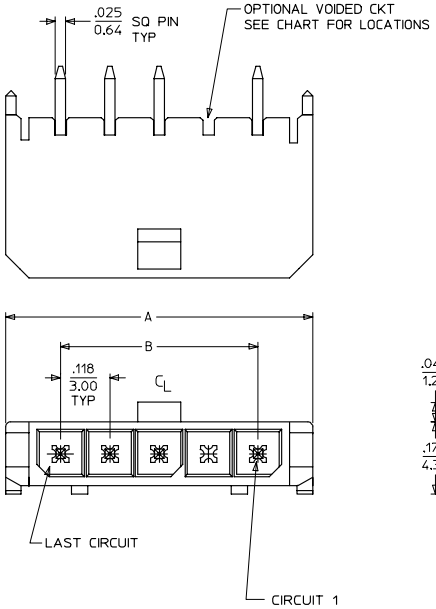

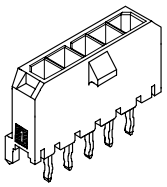

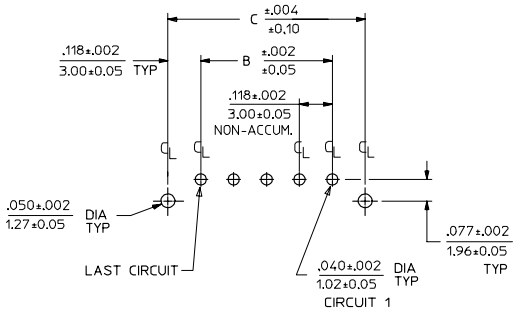

PCB LAYOUT: COMPONENT SIDE
RECOMMENDED PCB THICKNESS: .062/1.57

CKTS	A	B	C
2	.380 / 9.65	.118 / 3.00	.354 / 9.00
3	.498 / 12.65	.236 / 6.00	.472 / 12.00
4	.616 / 15.65	.354 / 9.00	.591 / 15.00
5	.734 / 18.64	.472 / 12.00	.709 / 18.00
6	.852 / 21.64	.591 / 15.00	.827 / 21.00
7	.970 / 24.64	.709 / 18.00	.945 / 24.00
8	1.088 / 27.64	.827 / 21.00	1.063 / 27.00
9	1.206 / 30.63	.945 / 24.00	1.181 / 30.00
10	1.325 / 33.66	1.063 / 27.00	1.299 / 33.00
11	1.443 / 36.65	1.181 / 30.00	1.417 / 36.00
12	1.561 / 39.65	1.299 / 33.00	1.535 / 39.00

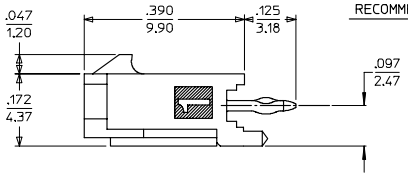

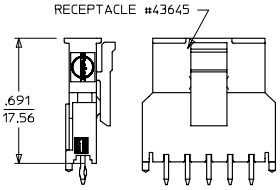

MATED MICRO FIT CONNECTORS

CKTS	FINISH A MATERIAL NO:	VOID CKT
02	43650-0215	
03	43650-0315	
04	43650-0415	
05	43650-0515	
06	43650-0615	
07	43650-0715	
08	43650-0815	
09	43650-0915	
10	43650-1015	
11	43650-1115	
12	43650-1215	
03	43650-0330	02
05	43650-9915	03
05	43650-0530	02,04
06	43650-0630	02,04,05

CKTS	FINISH B MATERIAL NO:	VOID CKT
02	43650-0216	
03	43650-0316	
04	43650-0416	
05	43650-0516	
06	43650-0616	
07	43650-0716	
08	43650-0816	
09	43650-0916	
10	43650-1016	
11	43650-1116	
12	43650-1216	
04	43650-0431	02,03

CKTS	FINISH C MATERIAL NO:	VOID CKT
02	43650-0217	
03	43650-0317	
04	43650-0417	
05	43650-0517	
06	43650-0617	
07	43650-0717	
08	43650-0817	
09	43650-0917	
10	43650-1017	
11	43650-1117	
12	43650-1217	
04	43650-0430	02,03

NOTES:

1. HOUSING MATERIAL: LIQUID CRYSTAL POLYMER, GLASS FILLED, UL94V-0, COLOR: BLACK
   TERMINAL MATERIAL: BRASS ALLOY
2. FINISH:
   A = .000100/(0.00254) MIN. BRIGHT TIN OVER .000050/(0.00127) MIN. NICKEL
   B = .000015/(0.00038) MIN. SELECT GOLD IN CONTACT AREA .000100/(0.00254) MIN. SELECT MATTE TIN ON SOLDER TAILS BOTH OVER .000050/(0.00127) NICKEL OVERALL
   C = .000030/(0.00076) MIN. SELECT GOLD IN CONTACT AREA .000100/(0.00254) MIN. SELECT MATTE TIN ON SOLDER TAILS BOTH OVER .000050/(0.00127) NICKEL OVERALL
   * THE PRIMARY SHIPPING CARTON WILL BE LABELED "COMPLIANT TO RoHS DIRECTIVE 2002/95/EC AND ELV ANNEX II OF DIRECTIVE 2000/53/EC." CARTONS WITHOUT THIS LABEL MAY CONTAIN PRODUCT WITH TIN/LEAD IN THE PC TAIL AREA.
3. PRODUCT SPECIFICATION: PS-43650
4. TRAY PACKAGED : SEE MOLEX DRAWING PK-70873-0811
5. MATES WITH MICRO FIT (3.0) RECEPTACLE SERIES 43645
6. A HIGHER TEMPERATURE GRADE MATERIAL (260C MAX. REFLOW TEMPERATURE) IS BEING PHASED-IN BEGINNING AUGUST 2007. PARTS WILL BE TEMPORARILY IDENTIFIED WITH A BLUE DOT ON THE PRIMARY SHIPPING CARTON LABEL UNTIL ALL CIRCUIT SIZES ARE CONVERTED, AT WHICH TIME A FULL-CONVERSION DATE WILL BE IDENTIFIED IN PS-43650.

REV	DESCRIPTION	DRAWN BY	DATE
6	.691 DIM. ADD NOTE 6 EC NO: UCP2008-0037	TI	2007/09/06
		DRAWN/CHK1 PER	2007/09/11
		CHK2:SSOUSEK	2007/09/11
		APPR:FSMITH	2007/09/12

QUALITY SYMBOLS: ▼=0 ◊=0

GENERAL TOLERANCES (UNLESS SPECIFIED)

	mm	INCH
4 PLACES	± ---	± ---
3 PLACES	± ---	± .010
2 PLACES	± 0.25	± .014
1 PLACE	± 0.36	± ---
ANGULAR ±1/2°		

DRAFT WHERE APPLICABLE MUST REMAIN WITHIN DIMENSIONS

DIMENSION STYLE: IN/MM
SCALE: ---
DESIGN UNITS: METRIC
THIRD ANGLE PROJECTION

DRAWN BY: SAMIEC	DATE: 2000/07/07	TITLE: MICRO-FIT (3.0) SINGLE ROW / VERTICAL THRU HOLE / PEGS / TRAY
CHECKED BY: MUELLER	DATE: 2000/07/07	
APPROVED BY: EDGLEY	DATE: 2000/07/07	MOLEX INCORPORATED
MATERIAL NO.: SEE CHART	DOCUMENT NO.: SD-43650-006	SHEET NO.: 1 OF 1

SIZE: C

THIS DRAWING CONTAINS INFORMATION THAT IS PROPRIETARY TO MOLEX INCORPORATED AND SHOULD NOT BE USED WITHOUT WRITTEN PERMISSION

tb_frame_C_P_ME_T
Rev. E 2006/04/15

Downloaded from Elcodis.com electronic components distributor