THIS DRAWING IS UNPUBLISHED. RELEASED FOR PUBLICATION -.-.-
© COPYRIGHT - BY TYCO ELECTRONICS CORPORATION. ALL RIGHTS RESERVED.

LOC	DIST
GP	00

REVISIONS

P	LTR	DESCRIPTION	DATE	DRN	APVD
	E	REVISED PER ECO-11-003735	16MAR2011	CJV	SLB

1. DOUBLE POLARIZATION SLOTS.
2. CENTER POLARIZATION SLOT.
3. FOR 10 POSN ASSEMBLY, SLOT OMITTED IN THIS LOCATION.
4. NUMBER 1 POSITION INDICATOR.
5. DATUMS U AND V TO BE ESTABLISHED BY THE CUSTOMER.
6. HOUSING: GLASS FILLED PPA, UL 94V-0, COLOR: BLACK.
   POSTS: BRASS.
7. POSTS: GOLD FLASH OVER PALLADIUM-NICKEL PLATE, .000015 MIN TOTAL ON THE MATING SURFACES, .000100 MIN TIN PLATE ON THE SOLDER-TAILS, .000050 MIN NICKEL UNDERPLATE ON THE ENTIRE POST.
   -OR-
   .000015 MIN GOLD PLATE ON THE MATING SURFACES, .000100 MIN TIN PLATE ON THE SOLDER-TAILS, .000050 MIN NICKEL UNDERPLATE ON THE ENTIRE POST.
8. THE RETENTION FEATURE ON THE SOLDER-TAILS WAS DESIGNED FOR A PCB THICKNESS OF .062±.007.
   THIS FEATURE ONLY APPLIES TO THE SOLDER-TAILS LOCATED ON THE END POSITIONS OF THE CONNECTOR (4 PLACES).
9. STANDOFFS:
   ALL POSITION SIZES - 2 LOCATED AT ENDS OF HOUSING.
   20 THRU 34 POSITION SIZES - 1 OPTIONAL STANDOFF CENTERED ON HOUSING.
   40 & 50 POSITION SIZES - 2 OPTIONAL STANDOFFS EVENLY SPACED WITHIN REMAINING LENGTH OF HOUSING.

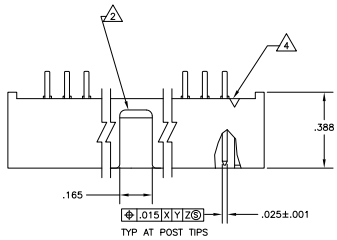

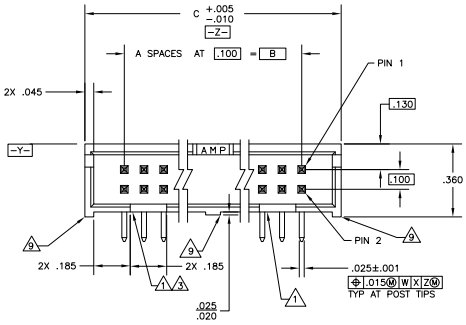

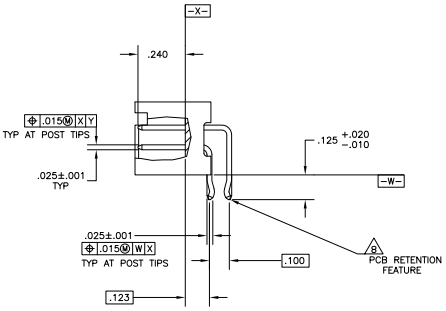

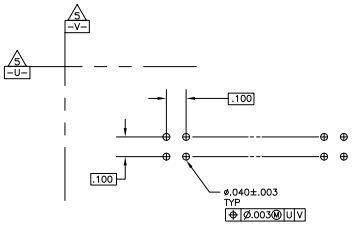

RECOMMENDED HOLE LAYOUT

C	B	A	NO OF POSN	PART NUMBER
2.800	2.400	24	50	5104340-9
2.300	1.900	19	40	5104340-8
2.000	1.600	16	34	5104340-7
1.500	1.100	11	24	5104340-5
1.300	.900	9	20	5104340-4
1.100	.700	7	16	5104340-3
1.000	.600	6	14	5104340-2
.800	.400	4	10	5104340-1

THIS DRAWING IS A CONTROLLED DOCUMENT.

DIMENSIONS: INCHES

TOLERANCE UNLESS OTHERWISE SPECIFIED: 0 PLC ± - ; 1 PLC ± - ; 2 PLC ± - ; 3 PLC ± .005 ; 4 PLC ± - ; ANGLES ± -

MATERIAL 6 FINISH 7

TITLE B. LATTUCA 03 NOV 05
DR S. BOLASH 03 NOV 05
APVD M. WALMSLEY 03 NOV 05

PRODUCT SPEC 108-40018
APPLICATION SPEC -
WEIGHT -

Tyco Electronics Corporation
Harrisburg, PA 17105-3608

NAME HEADER ASSY, RIGHT ANGLE, LOW PROFILE, AMP-LATCH
-

SIZE A1 CAGE CODE 00779 DRAWING NO C-5104340 RESTRICTED TO -

CUSTOMER DRAWING SCALE 4:1 SHEET 1 OF 1 REV E

AMP 4805 REV 31MAR2000

Downloaded from Elcodis.com electronic components distributor