THIS DRAWING IS UNPUBLISHED. RELEASED FOR PUBLICATION
© COPYRIGHT – BY TYCO ELECTRONICS CORPORATION. ALL RIGHTS RESERVED.

LOC	DIST	REVISIONS				
FT	0	P	LTR	DESCRIPTION	DATE	DWN	APVD
			F	REVISED PER ECO-06-4207	2/23/06	SS	SH

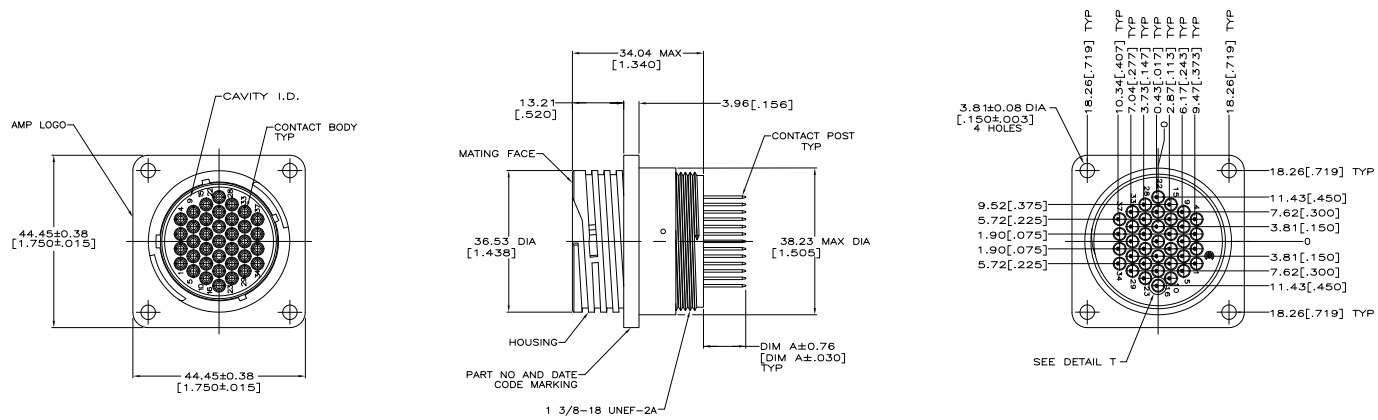

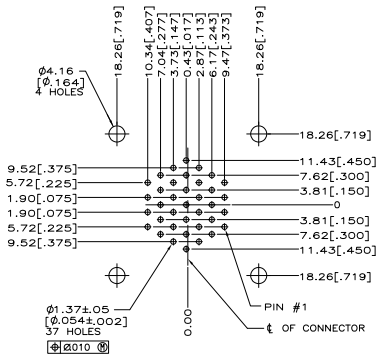

RECOMMENDED P.C. BOARD LAYOUT

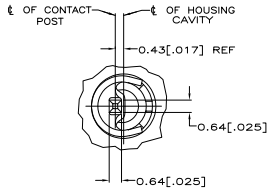

DETAIL T
SCALE 10:1
TYP

1. NYLON, UL 94V-0 RATED, BLACK.
2. STAINLESS STEEL.
3. BRASS.
4. CONTACT BODY: 0.76um [.000030] MIN GOLD FOR A LENGTH OF 5.08 [.200] MIN FROM MATING END. GOLD FLASH ON REMAINDER, BOTH OVER 1.27um [.000050] MIN NICKEL.
   CONTACT POST: 2.54um [.000100] MIN TIN-LEAD OVER 1.27um [.000050] MIN NICKEL.
5. RECOMMENDED PC BOARD HOLE SIZE FOR CONTACT POST = 1.02±0.08[.040±.003] DIA.
6. CONTACT BODY: 0.76um [.000030] MIN GOLD FOR A LENGTH OF 5.08 [.200] MIN FROM MATING END. GOLD FLASH ON REMAINDER, BOTH OVER 1.27um [.000050] MIN NICKEL.
   CONTACT POST: 2.54um [.000100] MIN TIN OVER 1.27um [.000050] MIN NICKEL.

FINISH	DIM A	PART NUMBER
6	5.59[.220]	213854-4
6	10.90[.429]	213854-3
4	5.59[.220]	213854-2
4	10.90[.429]	213854-1

THIS DRAWING IS A CONTROLLED DOCUMENT.

DIMENSIONS: mm [INCHES]
TOLERANCES UNLESS OTHERWISE SPECIFIED: 0 PLC ± – ; 1 PLC ± – ; 2 PLC ± – ; 3 PLC ± .005 ; 4 PLC ± – ; ANGLES ± –
MATERIAL HOUSING 1, CONTACT SPRING 2, CONTACT BODY & POST 3
FINISH

DRN D.HARDY 01-03-95
CHK R.STONE 01-09-95
APVD T.COULSON 01-10-95
PRODUCT SPEC 108-10024
APPLICATION SPEC –
WEIGHT –
CUSTOMER DRAWING

Tyco Electronics Corporation
Harrisburg, PA 17105-3608

NAME: RECEPTACLE ASSEMBLY, POSTED, STD SEX, SERIES 1, 23-37, CPC
–

SIZE A1 | CAGE CODE 00779 | DRAWING NO C-213854 | RESTRICTED TO –
SCALE 2:1 | SHEET 1 OF 1 | REV F

AMP 4805 REV 3/18/02/00

Downloaded from Elcodis.com electronic components distributor