Features

- Lead free as standard*
- RoHS compliant**
- ESD protection
- Protects 2 lines
- Low leakage current
- Low capacitance

Applications

- Ethernet - 10/100/1000 Base T
- Firewire and USB
- Portable electronics
- Video/Graphic Cards

CD143A-SR2.8~3.3 – Steering/TVS Diode Array Series

General Information

The CD143A-SR2.8 and CD143A-SR3.3 devices provides ESD protection for the external ports of portable electronic devices such as cell phones, handheld electronics and personal computers.

The ESD protection provided by the component enables a data port to withstand a minimum ±8 KV Contact / ±15 KV Air Discharge per the ESD test method specified in IEC 61000-4-2. The device measures 2.80 mm x 1.20 mm and is available in a SOT-143 package intended to be mounted directly onto an FR4 printed circuit board.

The Bourns® device will meet IEC 61000-4-2 (ESD), IEC 61000-4-4 (EFT) and IEC 61000-4-5 (Surge) requirements.

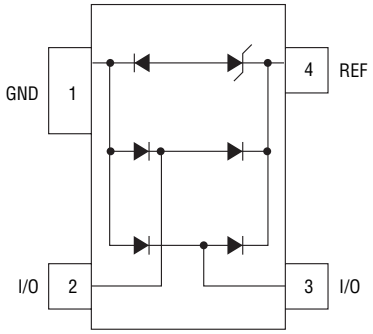

Absolute Maximum Ratings (@ T_A = 25 °C Unless Otherwise Noted)

Parameter	Symbol	Value	Unit
Peak Pulse Power (t_p = 8/20 µs)[1]	P_{PP}	200	W
Peak Pulse Current (t_p = 8/20 µs)	I_{PP}	12	A
Operating Supply Voltage (Vdd - Gnd)	V_{dc}	3.8	V
ESD per IEC 61000-4-2 (Air) (Contact)	V_{esd}	±30	kV
DC Voltage at any I/O Pin	V_{io}	(Gnd - 0.50) to (Vdd + 0.5)	V
Operating Temperature	T_J	-55 °C to 125 °C	°C
Storage Temperature	T_{STG}	-55 °C to 150 °C	°C

Electrical and Thermal Characteristics (@ T_A = 25 °C Unless Otherwise Noted)

Parameter	Symbol	CD143A-SR2.8	CD143A-SR3.3	Unit
Breakdown Voltage Minimum @ 2 µA [2]	V_{BR}	3.0	3.5	V
Working Peak Voltage [2]	V_{WM}	2.8	3.3	V
Snap-Back Voltage Minimum @ 50 mA	V_{SB}	2.8	3.3	V
Clamping Voltage Maximum @ I_P = 1 A [2,3]	V_C	5.0	7.0	V
Clamping Voltage Maximum @ I_P [2,3]	V_C	8.5 @ 5 A	15 @ 10 A	V
Reverse Leakage Current Maximum @ V_{WM} [2]	I_L	5.0		uA
Forward Voltage Maximum @ 15 mA	V_f	1.0		V
Leakage Current @ V_{WM} [4]	I_D	1.0		µA
Capacitance Typical @ 0 V, 1 MHz [4]	C_J	4.5		pF
ESD Protection per IEC 61000-4-2 Minimum Contact Discharge Minimum Air Discharge	ESD	+/-8 +/-15		kV
EFT Protection per IEC 61000-4-4 @ 5/50ns	EFT	40		A
Surge Protection per IEC 61000-4-5 @ 8/20µs	Surge	12		A

Notes:
1. See Peak Pulse Power vs. Pulse Time.
2. From Pin 4 to Pin 1.
3. See Pulse Wave Form.
4. From Pin 1 to Pin 3, Pin 1 to Pin 2.

*No lead detected in standard tests of homogeneous materials.
**RoHS Directive 2002/95/EC Jan 27 2003 including Annex
Specifications are subject to change without notice.
Customers should verify actual device performance in their specific applications.

Product Dimensions

This is a molded JEDEC SOT-143 device. It weighs approximately 35 mg and has a flammability rating of UL 94V-0. The dimensions for the packaged device are shown below.

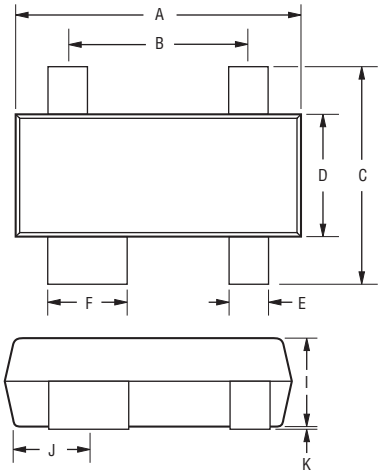

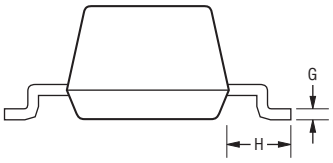

DIMENSIONS: MM (INCHES)

Dimensions	
A	2.80 - 3.04 (0.110 - 0.12)
B	1.78 - 2.03 (0.070 - 0.080)
C	2.11 - 2.48 (0.083 - 0.098)
D	1.20 - 1.39 (0.047 - 0.055)
E	0.39 - 0.50 (0.015 - 0.020)
F	0.79 - 0.93 (0.031 - 0.037)
G	0.08 - 0.15 (0.003 - 0.006)
H	0.46 - 0.60 (0.018 - 0.024)
I	0.84 - 1.14 (0.033 - 0.045)
J	0.72 - 0.83 (0.028 - 0.033)
K	0.013 - 0.10 (0.0005 - 0.004)

Recommended Pad Layout

This is the footprint recommended for this SOT-143 device.

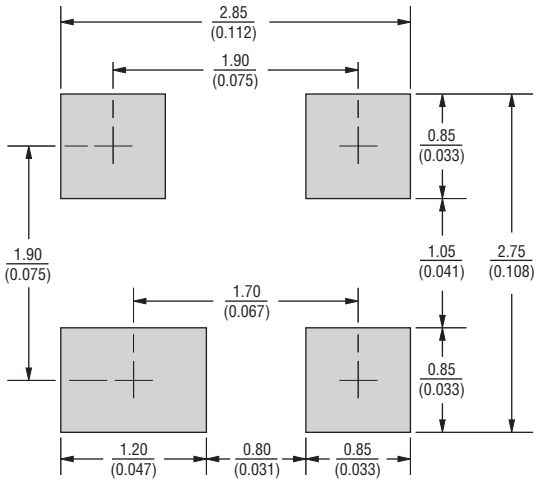

DIMENSIONS: MM (INCHES)

Block Diagram

The device block diagram below includes the pin names and basic electrical connections associated with each channel.

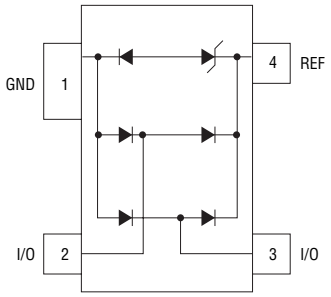

Typical Part Marking

CD143A-SR2.8 .....2A

CD143A-SR3.3 .....3A

Performance Graphs

Pulse Wave Form

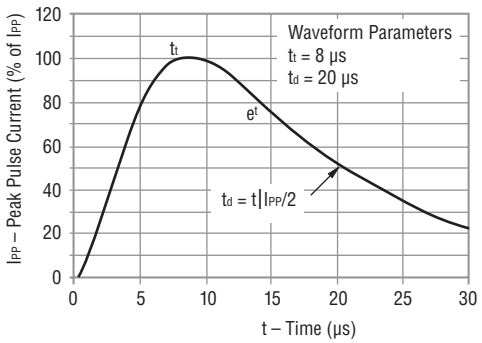

Clamping Voltage vs. Peak Pulse Current

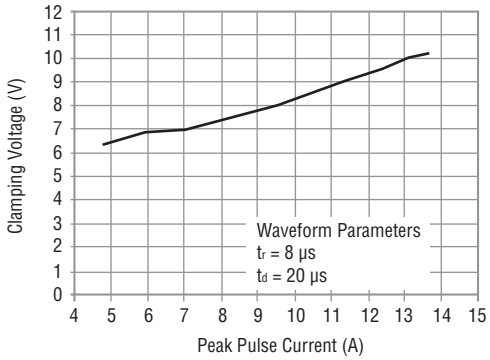

Forward Clamping Voltage vs. Peak Pulse Current

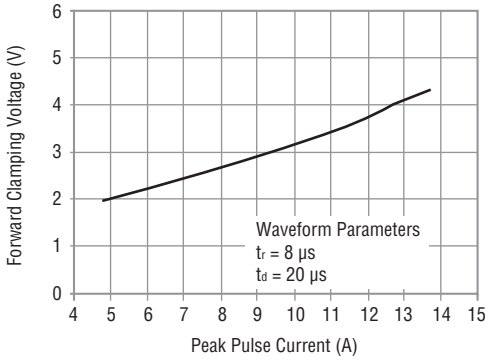

Typical Variation of C_{IN} vs. V_{IN}

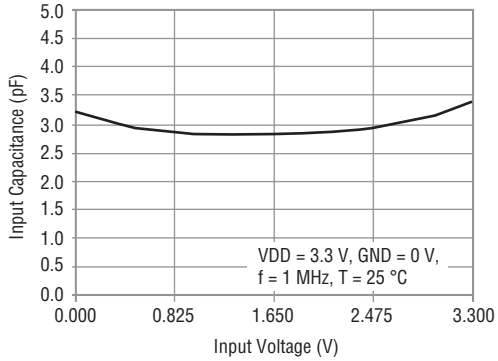

Typical Variation of $C_{I/O\text{-}to\text{-}I/O}$ vs. V_{IN}

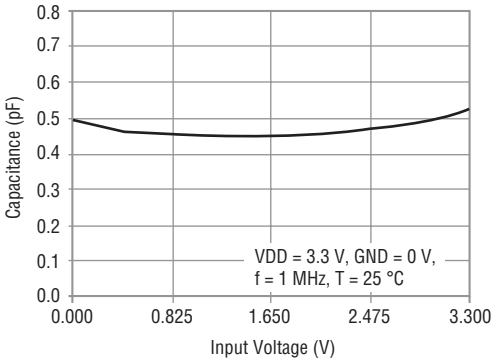

How To Order

CD 143A - SR 2.8

Common Code
Chip Diode

Package
• 143A = SOT-143

Model
SR = Steering Diode Array

Repetitive Peak Reverse Voltage
2.8 = 2.8 V_{RWM} (Volts)
3.3 = 3.3 V_{RWM} (Volts)

Specifications are subject to change without notice.
Customers should verify actual device performance in their specific applications.

Packaging Information

The surface mount product is packaged in an 8 mm x 4 mm tape and reel format per EIA-481 standard.

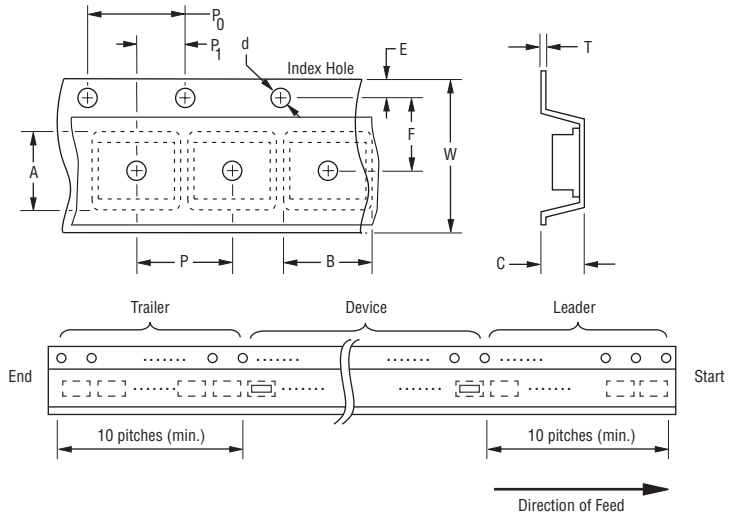

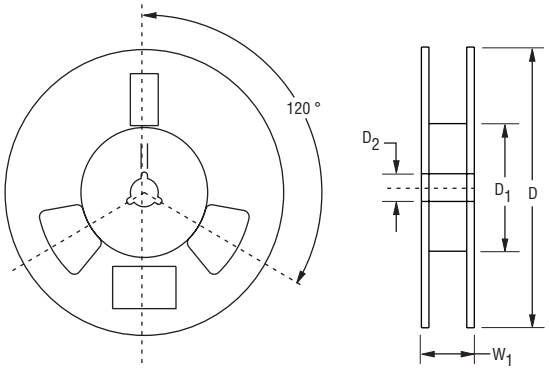

Item	Symbol	SOT-143
Carrier Width	A	2.75 ±0.10 (0.108 - 0.004)
Carrier Length	B	3.30 ±0.10 (0.130 - 0.004)
Carrier Depth	C	1.25 ±0.10 (0.049 - 0.004)
Sprocket Hole	d	1.55 ±0.05 (0.061 - 0.002)
Reel Outside Diameter	D	178 (7.008)
Reel Inner Diameter	D_1	50.0 (1.969) Min.
Feed Hole Diameter	D_2	13.0 ±0.20 (0.512 - 0.008)
Sprocket Hole Position	E	1.75 ±0.10 (0.069 - 0.004)
Punch Hole Position	F	3.50 ±0.05 (0.138 - 0.002)
Punch Hole Pitch	P	4.00 ±0.10 (0.157 - 0.004)
Sprocket Hole Pitch	P_0	4.00 ±0.10 (0.157 - 0.004)
Embossment Center	P_1	2.00 ±0.05 (0.079 - 0.002)
Overall Tape Thickness	T	0.20 ±0.10 (0.008 - 0.004)
Tape Width	W	8.00 ±0.20 (0.315 - 0.008)
Reel Width	W_1	14.4 (0.567) Max.
Quantity per Reel	—	3,000

BOURNS®

Asia-Pacific:
Tel: +886-2 2562-4117 • Fax: +886-2 2562-4116
Europe:
Tel: +41-41 768 5555 • Fax: +41-41 768 5510
The Americas:
Tel: +1-951 781-5500 • Fax: +1-951 781-5700
www.bourns.com