IDT SL Hand Tool Module
Operating Instruction for
SL 70400 and 70475 Series
Order No. 62100-0700

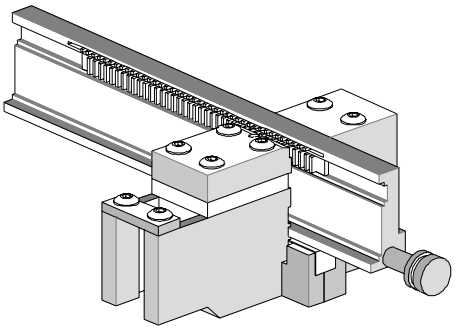

FEATURES

- This module is to be used with the 63600-0478 pistol grip hand tool handle.
- It inserts individual hand-loaded discrete wires into the Molex SL Connector 70400 and 70475 series.
- The tool will accommodate 3 to 25 circuit connectors, (2-circuit connectors are always in pairs).
- The module automatically indexes to the next position after termination.

SCOPE

Products: C-Grid SL™ Insulation Displacement connector assemblies. The module by itself measures 185mm (7.28in.) wide by 97mm (3.82in.) deep by 50mm (1.97in.) high. And weights 0.41kg (0.9lb).

Product List

The following is a partial list of the product order numbers and their specifications that this tool is designed to run. Updates to this list are available on www.molex.com.

Connector Series No	Description
70400	2.54mm (.100") Pitch C-Grid SL™ Insulation Displacement Female Connector Assembly
70475	2.54mm (.100") Pitch SL™ Insulation Displacement Male Connector Assembly

Connector Series No.70400	
Order No.	Engineer No.
14-56-2021	A-70400-0526
14-56-2022	A-70400-0666
14-56-2023	A-70400-0701
14-56-2024	A-70400-0841
14-56-2025	A-70400-0876
14-56-2026	A-70400-1016
14-56-2027	A-70400-1051
14-56-2028	A-70400-1191
14-56-2029	A-70400-1226
14-56-2031	A-70400-0527
14-56-2032	A-70400-0667
14-56-2033	A-70400-0702
14-56-2034	A-70400-0842
14-56-2035	A-70400-0877
14-56-2036	A-70400-1017
14-56-2037	A-70400-1052
14-56-2038	A-70400-1192
14-56-2039	A-70400-1227
14-56-2041	A-70400-0528
14-56-2042	A-70400-0668
14-56-2043	A-70400-0703
14-56-2044	A-70400-0843
14-56-2045	A-70400-0878
14-56-2046	A-70400-1018
14-56-2047	A-70400-1053
14-56-2048	A-70400-1193
14-56-2049	A-70400-1228
14-56-2051	A-70400-0529

Connector Series No.70400	
Order No.	Engineer No.
14-56-2052	A-70400-0669
14-56-2053	A-70400-0704
14-56-2054	A-70400-0844
14-56-2055	A-70400-0879
14-56-2056	A-70400-1019
14-56-2057	A-70400-1054
14-56-2058	A-70400-1194
14-56-2059	A-70400-1229
14-56-2061	A-70400-0530
14-56-2062	A-70400-0670
14-56-2063	A-70400-0705
14-56-2064	A-70400-0845
14-56-2065	A-70400-0880
14-56-2066	A-70400-1020
14-56-2067	A-70400-1055
14-56-2068	A-70400-1195
14-56-2069	A-70400-1230
14-56-2071	A-70400-0531
14-56-2072	A-70400-0671
14-56-2073	A-70400-0706
14-56-2074	A-70400-0846
14-56-2075	A-70400-0881
14-56-2076	A-70400-1021
14-56-2077	A-70400-1056
14-56-2078	A-70400-1196
14-56-2079	A-70400-1231
14-56-2081	A-70400-0532
14-56-2082	A-70400-0672

Connector Series No.70400	
Order No.	Engineer No.
14-56-2083	A-70400-0707
14-56-2084	A-70400-0847
14-56-2085	A-70400-0882
14-56-2086	A-70400-1022
14-56-2087	A-70400-1057
14-56-2088	A-70400-1197
14-56-2089	A-70400-1232
14-56-2091	A-70400-0533
14-56-2092	A-70400-0673
14-56-2093	A-70400-0708
14-56-2094	A-70400-0848
14-56-2095	A-70400-0883
14-56-2096	A-70400-1023
14-56-2097	A-70400-1058
14-56-2098	A-70400-1198
14-56-2099	A-70400-1233
14-56-2101	A-70400-0534
14-56-2102	A-70400-0674
14-56-2103	A-70400-0709
14-56-2104	A-70400-0849
14-56-2105	A-70400-0884
14-56-2106	A-70400-1024
14-56-2107	A-70400-1059
14-56-2108	A-70400-1199
14-56-2109	A-70400-1234
14-56-2111	A-70400-0535
14-56-2112	A-70400-0675
14-56-2113	A-70400-0710

Connector Series No.70400	
Order No.	Engineer No.
14-56-2114	A-70400-0850
14-56-2115	A-70400-0885
14-56-2116	A-70400-1025
14-56-2117	A-70400-1060
14-56-2118	A-70400-1200
14-56-2119	A-70400-1235
14-56-2121	A-70400-0536
14-56-2122	A-70400-0676
14-56-2123	A-70400-0711
14-56-2124	A-70400-0851
14-56-2125	A-70400-0886
14-56-2126	A-70400-1026
14-56-2127	A-70400-1061
14-56-2128	A-70400-1201
14-56-2129	A-70400-1236
14-56-2131	A-70400-0537
14-56-2132	A-70400-0677
14-56-2133	A-70400-0712
14-56-2134	A-70400-0852
14-56-2135	A-70400-0887
14-56-2136	A-70400-1027
14-56-2137	A-70400-1062
14-56-2138	A-70400-1202
14-56-2139	A-70400-1237
14-56-2141	A-70400-0538
14-56-2142	A-70400-0678
14-56-2143	A-70400-0713
14-56-2144	A-70400-0853

Downloaded from Elcodis.com electronic components distributor

Connector Series No.70400	
Order No.	Engineer No.
14-56-2145	A-70400-0888
14-56-2146	A-70400-1028
14-56-2147	A-70400-1063
14-56-2148	A-70400-1203
14-56-2149	A-70400-1238
14-56-2151	A-70400-0539
14-56-2152	A-70400-0679
14-56-2153	A-70400-0714
14-56-2154	A-70400-0854
14-56-2155	A-70400-0889
14-56-2156	A-70400-1029
14-56-2157	A-70400-1064
14-56-2158	A-70400-1204
14-56-2159	A-70400-1239
14-56-2161	A-70400-0540
14-56-2162	A-70400-0680
14-56-2163	A-70400-0715
14-56-2164	A-70400-0855
14-56-2165	A-70400-0890
14-56-2166	A-70400-1030
14-56-2167	A-70400-1065
14-56-2168	A-70400-1205
14-56-2169	A-70400-1240
14-56-2171	A-70400-0541
14-56-2172	A-70400-0681
14-56-2173	A-70400-0716
14-56-2174	A-70400-0856
14-56-2175	A-70400-0891
14-56-2176	A-70400-1031
14-56-2177	A-70400-1066
14-56-2178	A-70400-1206
14-56-2179	A-70400-1241
14-56-2181	A-70400-0542
14-56-2182	A-70400-0682
14-56-2183	A-70400-0717
14-56-2184	A-70400-0857
14-56-2185	A-70400-0892
14-56-2186	A-70400-1032
14-56-2187	A-70400-1067
14-56-2188	A-70400-1207
14-56-2189	A-70400-1242
14-56-2191	A-70400-0543
14-56-2192	A-70400-0683
14-56-2193	A-70400-0718
14-56-2194	A-70400-0858
14-56-2195	A-70400-0893
14-56-2196	A-70400-1033
14-56-2197	A-70400-1068
14-56-2198	A-70400-1208
14-56-2199	A-70400-1243
14-56-2201	A-70400-0544
14-56-2202	A-70400-0684
14-56-2203	A-70400-0719
14-56-2204	A-70400-0859
14-56-2205	A-70400-0894
14-56-2206	A-70400-1034
14-56-2207	A-70400-1069
14-56-2208	A-70400-1209
14-56-2209	A-70400-1244
14-56-2211	A-70400-0545
14-56-2212	A-70400-0685
14-56-2213	A-70400-0720
14-56-2214	A-70400-0860
14-56-2215	A-70400-0895
14-56-2216	A-70400-1035
14-56-2217	A-70400-1070
14-56-2218	A-70400-1210

Connector Series No.70400	
Order No.	Engineer No.
14-56-2219	A-70400-1245
14-56-2221	A-70400-0546
14-56-2222	A-70400-0686
14-56-2223	A-70400-0721
14-56-2224	A-70400-0861
14-56-2225	A-70400-0896
14-56-2226	A-70400-1036
14-56-2227	A-70400-1071
14-56-2228	A-70400-1211
14-56-2229	A-70400-1246
14-56-2231	A-70400-0547
14-56-2232	A-70400-0687
14-56-2233	A-70400-0722
14-56-2234	A-70400-0862
14-56-2235	A-70400-0897
14-56-2236	A-70400-1037
14-56-2237	A-70400-1072
14-56-2238	A-70400-1212
14-56-2239	A-70400-1247
14-56-2241	A-70400-0548
14-56-2242	A-70400-0688
14-56-2243	A-70400-0723
14-56-2244	A-70400-0863
14-56-2245	A-70400-0898
14-56-2246	A-70400-1038
14-56-2247	A-70400-1073
14-56-2248	A-70400-1213
14-56-2249	A-70400-1248
14-56-2251	A-70400-0549
14-56-2252	A-70400-0689
14-56-2253	A-70400-0724
14-56-2254	A-70400-0864
14-56-2255	A-70400-0899
14-56-2256	A-70400-1039
14-56-2257	A-70400-1074
14-56-2258	A-70400-1214
14-56-2259	A-70400-1249
14-56-3021	A-70400-1366
14-56-3022	A-70400-1401
14-56-3023	A-70400-1541
14-56-3024	A-70400-0596
14-56-3025	A-70400-0561
14-56-3026	A-70400-0736
14-56-3027	A-70400-0771
14-56-3028	A-70400-0911
14-56-3029	A-70400-0946
14-56-3031	A-70400-1367
14-56-3032	A-70400-1402
14-56-3033	A-70400-1542
14-56-3034	A-70400-0597
14-56-3035	A-70400-0562
14-56-3036	A-70400-0737
14-56-3037	A-70400-0772
14-56-3038	A-70400-0912
14-56-3039	A-70400-0947
14-56-3041	A-70400-1368
14-56-3042	A-70400-1403
14-56-3043	A-70400-1543
14-56-3044	A-70400-0598
14-56-3045	A-70400-0563
14-56-3046	A-70400-0738
14-56-3047	A-70400-0773
14-56-3048	A-70400-0913
14-56-3049	A-70400-0948
14-56-3051	A-70400-1369
14-56-3052	A-70400-1404
14-56-3053	A-70400-1544

Connector Series No.70400	
Order No.	Engineer No.
14-56-3054	A-70400-0599
14-56-3055	A-70400-0564
14-56-3056	A-70400-0739
14-56-3057	A-70400-0774
14-56-3058	A-70400-0914
14-56-3059	A-70400-0949
14-56-3061	A-70400-1370
14-56-3062	A-70400-1405
14-56-3063	A-70400-1545
14-56-3064	A-70400-0600
14-56-3065	A-70400-0565
14-56-3066	A-70400-0740
14-56-3067	A-70400-0775
14-56-3068	A-70400-0915
14-56-3069	A-70400-0950
14-56-3071	A-70400-1371
14-56-3072	A-70400-1406
14-56-3073	A-70400-1546
14-56-3074	A-70400-0601
14-56-3075	A-70400-0566
14-56-3076	A-70400-0741
14-56-3077	A-70400-0776
14-56-3078	A-70400-0916
14-56-3079	A-70400-0951
14-56-3081	A-70400-1372
14-56-3082	A-70400-1407
14-56-3083	A-70400-1547
14-56-3084	A-70400-0602
14-56-3085	A-70400-0567
14-56-3086	A-70400-0742
14-56-3087	A-70400-0777
14-56-3088	A-70400-0917
14-56-3089	A-70400-0952
14-56-3091	A-70400-1373
14-56-3092	A-70400-1408
14-56-3093	A-70400-1548
14-56-3094	A-70400-0603
14-56-3095	A-70400-0568
14-56-3096	A-70400-0743
14-56-3097	A-70400-0778
14-56-3098	A-70400-0918
14-56-3099	A-70400-0953
14-56-3101	A-70400-1374
14-56-3102	A-70400-1409
14-56-3103	A-70400-1549
14-56-3104	A-70400-0604
14-56-3105	A-70400-0569
14-56-3106	A-70400-0744
14-56-3107	A-70400-0779
14-56-3108	A-70400-0919
14-56-3109	A-70400-0954
14-56-3111	A-70400-1375
14-56-3112	A-70400-1410
14-56-3113	A-70400-1550
14-56-3114	A-70400-0605
14-56-3115	A-70400-0570
14-56-3116	A-70400-0745
14-56-3117	A-70400-0780
14-56-3118	A-70400-0920
14-56-3119	A-70400-0955
14-56-3121	A-70400-1376
14-56-3122	A-70400-1411
14-56-3123	A-70400-1551
14-56-3124	A-70400-0606
14-56-3125	A-70400-0571
14-56-3126	A-70400-0746
14-56-3127	A-70400-0781

Connector Series No.70400	
Order No.	Engineer No.
14-56-3128	A-70400-0921
14-56-3129	A-70400-0956
14-56-3131	A-70400-1377
14-56-3132	A-70400-1412
14-56-3133	A-70400-1552
14-56-3134	A-70400-0607
14-56-3135	A-70400-0572
14-56-3136	A-70400-0747
14-56-3137	A-70400-0782
14-56-3138	A-70400-0922
14-56-3139	A-70400-0957
14-56-3141	A-70400-1378
14-56-3142	A-70400-1413
14-56-3143	A-70400-1553
14-56-3144	A-70400-0608
14-56-3145	A-70400-0573
14-56-3146	A-70400-0748
14-56-3147	A-70400-0783
14-56-3148	A-70400-0923
14-56-3149	A-70400-0958
14-56-3151	A-70400-1379
14-56-3152	A-70400-1414
14-56-3153	A-70400-1554
14-56-3154	A-70400-0609
14-56-3155	A-70400-0574
14-56-3156	A-70400-0749
14-56-3157	A-70400-0784
14-56-3158	A-70400-0924
14-56-3159	A-70400-0959
14-56-3161	A-70400-1380
14-56-3162	A-70400-1415
14-56-3163	A-70400-1555
14-56-3164	A-70400-0610
14-56-3165	A-70400-0575
14-56-3166	A-70400-0750
14-56-3167	A-70400-0785
14-56-3168	A-70400-0925
14-56-3169	A-70400-0960
14-56-3171	A-70400-1381
14-56-3172	A-70400-1416
14-56-3173	A-70400-1556
14-56-3174	A-70400-0611
14-56-3175	A-70400-0576
14-56-3176	A-70400-0751
14-56-3177	A-70400-0786
14-56-3178	A-70400-0926
14-56-3179	A-70400-0961
14-56-3181	A-70400-1382
14-56-3182	A-70400-1417
14-56-3183	A-70400-1557
14-56-3184	A-70400-0612
14-56-3185	A-70400-0577
14-56-3186	A-70400-0752
14-56-3187	A-70400-0787
14-56-3188	A-70400-0927
14-56-3189	A-70400-0962
14-56-3191	A-70400-1383
14-56-3192	A-70400-1418
14-56-3193	A-70400-1558
14-56-3194	A-70400-0613
14-56-3195	A-70400-0578
14-56-3196	A-70400-0753
14-56-3197	A-70400-0788
14-56-3198	A-70400-0928
14-56-3199	A-70400-0963
14-56-3201	A-70400-1384
14-56-3202	A-70400-1419

Downloaded from Elcodis.com electronic components distributor

Connector Series No.70400	
Order No.	Engineer No.
14-56-3203	A-70400-1559
14-56-3204	A-70400-0614
14-56-3205	A-70400-0579
14-56-3206	A-70400-0754
14-56-3207	A-70400-0789
14-56-3208	A-70400-0929
14-56-3209	A-70400-0964
14-56-3211	A-70400-1385
14-56-3212	A-70400-1420
14-56-3213	A-70400-1560
14-56-3214	A-70400-0615
14-56-3215	A-70400-0580
14-56-3216	A-70400-0755
14-56-3217	A-70400-0790
14-56-3218	A-70400-0930
14-56-3219	A-70400-0965
14-56-3221	A-70400-1386
14-56-3222	A-70400-1421
14-56-3223	A-70400-1561
14-56-3224	A-70400-0616
14-56-3225	A-70400-0581
14-56-3226	A-70400-0756
14-56-3227	A-70400-0791
14-56-3228	A-70400-0931
14-56-3229	A-70400-0966
14-56-3231	A-70400-1387
14-56-3232	A-70400-1422
14-56-3233	A-70400-1562
14-56-3234	A-70400-0617
14-56-3235	A-70400-0582
14-56-3236	A-70400-0757
14-56-3237	A-70400-0792
14-56-3238	A-70400-0932
14-56-3239	A-70400-0967
14-56-3241	A-70400-1388
14-56-3242	A-70400-1423
14-56-3243	A-70400-1563
14-56-3244	A-70400-0618
14-56-3245	A-70400-0583
14-56-3246	A-70400-0758
14-56-3247	A-70400-0793
14-56-3248	A-70400-0933
14-56-3249	A-70400-0968
14-56-3251	A-70400-1389
14-56-3252	A-70400-1424
14-56-3253	A-70400-1564
14-56-3254	A-70400-0619
14-56-3255	A-70400-0584
14-56-3256	A-70400-0759
14-56-3257	A-70400-0794
14-56-3258	A-70400-0934
14-56-3259	A-70400-0969
14-56-4020	A-70400-1086
14-56-4021	A-70400-1121
14-56-4022	A-70400-1261
14-56-4023	A-70400-1296
14-56-4024	A-70400-1436
14-56-4025	A-70400-1471
14-56-4030	A-70400-1087
14-56-4031	A-70400-1122
14-56-4032	A-70400-1262
14-56-4033	A-70400-1297
14-56-4034	A-70400-1437
14-56-4035	A-70400-1472
14-56-4040	A-70400-1088
14-56-4041	A-70400-1123
14-56-4042	A-70400-1263

Connector Series No.70400	
Order No.	Engineer No.
14-56-4043	A-70400-1298
14-56-4044	A-70400-1438
14-56-4045	A-70400-1473
14-56-4050	A-70400-1089
14-56-4051	A-70400-1124
14-56-4052	A-70400-1264
14-56-4053	A-70400-1299
14-56-4054	A-70400-1439
14-56-4055	A-70400-1474
14-56-4060	A-70400-1090
14-56-4061	A-70400-1125
14-56-4062	A-70400-1265
14-56-4063	A-70400-1300
14-56-4064	A-70400-1440
14-56-4065	A-70400-1475
14-56-4070	A-70400-1091
14-56-4071	A-70400-1126
14-56-4072	A-70400-1266
14-56-4073	A-70400-1301
14-56-4074	A-70400-1441
14-56-4075	A-70400-1476
14-56-4080	A-70400-1092
14-56-4081	A-70400-1127
14-56-4082	A-70400-1267
14-56-4083	A-70400-1302
14-56-4084	A-70400-1442
14-56-4085	A-70400-1477
14-56-4090	A-70400-1093
14-56-4091	A-70400-1128
14-56-4092	A-70400-1268
14-56-4093	A-70400-1303
14-56-4094	A-70400-1443
14-56-4095	A-70400-1478
14-56-4100	A-70400-1094
14-56-4101	A-70400-1129
14-56-4102	A-70400-1269
14-56-4103	A-70400-1304
14-56-4104	A-70400-1444
14-56-4105	A-70400-1479
14-56-4110	A-70400-1095
14-56-4111	A-70400-1130
14-56-4112	A-70400-1270
14-56-4113	A-70400-1305
14-56-4114	A-70400-1445
14-56-4115	A-70400-1480
14-56-4120	A-70400-1096
14-56-4121	A-70400-1131
14-56-4122	A-70400-1271
14-56-4123	A-70400-1306
14-56-4124	A-70400-1446
14-56-4125	A-70400-1481
14-56-4130	A-70400-1097
14-56-4131	A-70400-1132
14-56-4132	A-70400-1272
14-56-4133	A-70400-1307
14-56-4134	A-70400-1447
14-56-4135	A-70400-1482
14-56-4140	A-70400-1098
14-56-4141	A-70400-1133
14-56-4142	A-70400-1273
14-56-4143	A-70400-1308
14-56-4144	A-70400-1448
14-56-4145	A-70400-1483
14-56-4150	A-70400-1099
14-56-4151	A-70400-1134
14-56-4152	A-70400-1274
14-56-4153	A-70400-1309

Connector Series No.70400	
Order No.	Engineer No.
14-56-4154	A-70400-1449
14-56-4155	A-70400-1484
14-56-4160	A-70400-1100
14-56-4161	A-70400-1135
14-56-4162	A-70400-1275
14-56-4163	A-70400-1310
14-56-4164	A-70400-1450
14-56-4165	A-70400-1485
14-56-4170	A-70400-1101
14-56-4171	A-70400-1136
14-56-4172	A-70400-1276
14-56-4173	A-70400-1311
14-56-4174	A-70400-1451
14-56-4175	A-70400-1486
14-56-4180	A-70400-1102
14-56-4181	A-70400-1137
14-56-4182	A-70400-1277
14-56-4183	A-70400-1312
14-56-4184	A-70400-1452
14-56-4185	A-70400-1487
14-56-4190	A-70400-1103
14-56-4191	A-70400-1138
14-56-4192	A-70400-1278
14-56-4193	A-70400-1313
14-56-4194	A-70400-1453
14-56-4195	A-70400-1488
14-56-4200	A-70400-1104
14-56-4201	A-70400-1139
14-56-4202	A-70400-1279
14-56-4203	A-70400-1314
14-56-4204	A-70400-1454
14-56-4205	A-70400-1489
14-56-4210	A-70400-1105
14-56-4211	A-70400-1140
14-56-4212	A-70400-1280
14-56-4213	A-70400-1315
14-56-4214	A-70400-1455
14-56-4215	A-70400-1490
14-56-4220	A-70400-1106
14-56-4221	A-70400-1141
14-56-4222	A-70400-1281
14-56-4223	A-70400-1316
14-56-4224	A-70400-1456
14-56-4225	A-70400-1491
14-56-4230	A-70400-1107
14-56-4231	A-70400-1142
14-56-4232	A-70400-1282
14-56-4233	A-70400-1317
14-56-4234	A-70400-1457
14-56-4235	A-70400-1492
14-56-4240	A-70400-1108
14-56-4241	A-70400-1143
14-56-4242	A-70400-1283
14-56-4243	A-70400-1318
14-56-4244	A-70400-1458
14-56-4245	A-70400-1493
14-56-4250	A-70400-1109
14-56-4251	A-70400-1144
14-56-4252	A-70400-1284
14-56-4253	A-70400-1319
14-56-4254	A-70400-1459
14-56-4255	A-70400-1494
14-56-6028	A-70400-2871
14-56-6029	A-70400-3000
14-56-6038	A-70400-2872
14-56-6039	A-70400-3001
14-56-6048	A-70400-2873

Connector Series No.70400	
Order No.	Engineer No.
14-56-6049	A-70400-3002
14-56-6058	A-70400-2874
14-56-6059	A-70400-3003
14-56-6068	A-70400-2875
14-56-6069	A-70400-3004
14-56-6078	A-70400-2876
14-56-6079	A-70400-3005
14-56-6088	A-70400-2877
14-56-6089	A-70400-3006
14-56-6098	A-70400-2878
14-56-6099	A-70400-3007
14-56-6108	A-70400-2879
14-56-6109	A-70400-3008
14-56-6118	A-70400-2880
14-56-6119	A-70400-3009
14-56-6128	A-70400-2881
14-56-6129	A-70400-3010
14-56-6138	A-70400-2882
14-56-6139	A-70400-3011
14-56-6148	A-70400-2883
14-56-6149	A-70400-3012
14-56-6158	A-70400-2884
14-56-6159	A-70400-3013
14-56-6168	A-70400-2885
14-56-6169	A-70400-3014
14-56-6178	A-70400-2886
14-56-6179	A-70400-3015
14-56-6188	A-70400-2887
14-56-6189	A-70400-3016
14-56-6198	A-70400-2888
14-56-6199	A-70400-3017
14-56-6208	A-70400-2889
14-56-6209	A-70400-3018
14-56-6218	A-70400-2890
14-56-6219	A-70400-3019
14-56-6228	A-70400-2891
14-56-6229	A-70400-3020
14-56-6238	A-70400-2892
14-56-6239	A-70400-3021
14-56-6248	A-70400-2893
14-56-6249	A-70400-3022
14-56-6258	A-70400-2894
14-56-6259	A-70400-3023
14-56-7020	A-70400-3035
14-56-7021	A-70400-3070
14-56-7022	A-70400-3140
14-56-7023	A-70400-2906
14-56-7024	A-70400-3175
14-56-7025	A-70400-3210
14-56-7026	A-70400-3245
14-56-7027	A-70400-2976
14-56-7028	A-70400-3315
14-56-7029	A-70400-3350
14-56-7030	A-70400-3036
14-56-7031	A-70400-3071
14-56-7032	A-70400-3141
14-56-7033	A-70400-2907
14-56-7034	A-70400-3176
14-56-7035	A-70400-3211
14-56-7036	A-70400-3246
14-56-7037	A-70400-2977
14-56-7038	A-70400-3316
14-56-7039	A-70400-3351
14-56-7040	A-70400-3037
14-56-7041	A-70400-3072
14-56-7042	A-70400-3142
14-56-7043	A-70400-2908

Downloaded from Elcodis.com electronic components distributor

Connector Series No.70400	
Order No.	Engineer No.
14-56-7044	A-70400-3177
14-56-7045	A-70400-3212
14-56-7046	A-70400-3247
14-56-7047	A-70400-2978
14-56-7048	A-70400-3317
14-56-7049	A-70400-3352
14-56-7050	A-70400-3038
14-56-7051	A-70400-3073
14-56-7052	A-70400-3143
14-56-7053	A-70400-2909
14-56-7054	A-70400-3178
14-56-7055	A-70400-3213
14-56-7056	A-70400-3248
14-56-7057	A-70400-2979
14-56-7058	A-70400-3318
14-56-7059	A-70400-3353
14-56-7060	A-70400-3039
14-56-7061	A-70400-3074
14-56-7062	A-70400-3144
14-56-7063	A-70400-2910
14-56-7064	A-70400-3179
14-56-7065	A-70400-3214
14-56-7066	A-70400-3249
14-56-7067	A-70400-2980
14-56-7068	A-70400-3319
14-56-7069	A-70400-3354
14-56-7070	A-70400-3040
14-56-7071	A-70400-3075
14-56-7072	A-70400-3145
14-56-7073	A-70400-2911
14-56-7074	A-70400-3180
14-56-7075	A-70400-3215
14-56-7076	A-70400-3250
14-56-7077	A-70400-2981
14-56-7078	A-70400-3320
14-56-7079	A-70400-3355
14-56-7080	A-70400-3041
14-56-7081	A-70400-3076
14-56-7082	A-70400-3146
14-56-7083	A-70400-2912
14-56-7084	A-70400-3181
14-56-7085	A-70400-3216
14-56-7086	A-70400-3251
14-56-7087	A-70400-2982
14-56-7088	A-70400-3321
14-56-7089	A-70400-3356
14-56-7090	A-70400-3042
14-56-7091	A-70400-3077
14-56-7092	A-70400-3147
14-56-7093	A-70400-2913
14-56-7094	A-70400-3182
14-56-7095	A-70400-3217
14-56-7096	A-70400-3252
14-56-7097	A-70400-2983
14-56-7098	A-70400-3322
14-56-7099	A-70400-3357
14-56-7100	A-70400-3043
14-56-7101	A-70400-3078
14-56-7102	A-70400-3148
14-56-7103	A-70400-2914
14-56-7104	A-70400-3183
14-56-7105	A-70400-3218
14-56-7106	A-70400-3253
14-56-7107	A-70400-2984
14-56-7108	A-70400-3323
14-56-7109	A-70400-3358
14-56-7110	A-70400-3044

Connector Series No.70400	
Order No.	Engineer No.
14-56-7111	A-70400-3079
14-56-7112	A-70400-3149
14-56-7113	A-70400-2915
14-56-7114	A-70400-3184
14-56-7115	A-70400-3219
14-56-7116	A-70400-3254
14-56-7117	A-70400-2985
14-56-7118	A-70400-3324
14-56-7119	A-70400-3359
14-56-7120	A-70400-3045
14-56-7121	A-70400-3080
14-56-7122	A-70400-3150
14-56-7123	A-70400-2916
14-56-7124	A-70400-3185
14-56-7125	A-70400-3220
14-56-7126	A-70400-3255
14-56-7127	A-70400-2986
14-56-7128	A-70400-3325
14-56-7129	A-70400-3360
14-56-7130	A-70400-3046
14-56-7131	A-70400-3081
14-56-7132	A-70400-3151
14-56-7133	A-70400-2917
14-56-7134	A-70400-3186
14-56-7135	A-70400-3221
14-56-7136	A-70400-3256
14-56-7137	A-70400-2987
14-56-7138	A-70400-3326
14-56-7139	A-70400-3361
14-56-7140	A-70400-3047
14-56-7141	A-70400-3082
14-56-7142	A-70400-3152
14-56-7143	A-70400-2918
14-56-7144	A-70400-3187
14-56-7145	A-70400-3222
14-56-7146	A-70400-3257
14-56-7147	A-70400-2988
14-56-7148	A-70400-3327
14-56-7149	A-70400-3362
14-56-7150	A-70400-3048
14-56-7151	A-70400-3083
14-56-7152	A-70400-3153
14-56-7153	A-70400-2919
14-56-7154	A-70400-3188
14-56-7155	A-70400-3223
14-56-7156	A-70400-3258
14-56-7157	A-70400-2989
14-56-7158	A-70400-3328
14-56-7159	A-70400-3363
14-56-7160	A-70400-3049
14-56-7161	A-70400-3084
14-56-7162	A-70400-3154
14-56-7163	A-70400-2920
14-56-7164	A-70400-3189
14-56-7165	A-70400-3224
14-56-7166	A-70400-3259
14-56-7167	A-70400-2990
14-56-7168	A-70400-3329
14-56-7169	A-70400-3364
14-56-7170	A-70400-3050
14-56-7171	A-70400-3085
14-56-7172	A-70400-3155
14-56-7173	A-70400-2921
14-56-7174	A-70400-3190
14-56-7175	A-70400-3225
14-56-7176	A-70400-3260
14-56-7177	A-70400-2991

Connector Series No.70400	
Order No.	Engineer No.
14-56-7178	A-70400-3330
14-56-7179	A-70400-3365
14-56-7180	A-70400-3051
14-56-7181	A-70400-3086
14-56-7182	A-70400-3156
14-56-7183	A-70400-2922
14-56-7184	A-70400-3191
14-56-7185	A-70400-3226
14-56-7186	A-70400-3261
14-56-7187	A-70400-2992
14-56-7188	A-70400-3331
14-56-7189	A-70400-3366
14-56-7190	A-70400-3052
14-56-7191	A-70400-3087
14-56-7192	A-70400-3157
14-56-7193	A-70400-2923
14-56-7194	A-70400-3192
14-56-7195	A-70400-3227
14-56-7196	A-70400-3262
14-56-7197	A-70400-2993
14-56-7198	A-70400-3332
14-56-7199	A-70400-3367
14-56-7200	A-70400-3053
14-56-7201	A-70400-3088
14-56-7202	A-70400-3158
14-56-7203	A-70400-2924
14-56-7204	A-70400-3193
14-56-7205	A-70400-3228
14-56-7206	A-70400-3263
14-56-7207	A-70400-2994
14-56-7208	A-70400-3333
14-56-7209	A-70400-3368
14-56-7210	A-70400-3054
14-56-7211	A-70400-3089
14-56-7212	A-70400-3159
14-56-7213	A-70400-2925
14-56-7214	A-70400-3194
14-56-7215	A-70400-3229
14-56-7216	A-70400-3264
14-56-7217	A-70400-2995
14-56-7218	A-70400-3334
14-56-7219	A-70400-3369
14-56-7220	A-70400-3055
14-56-7221	A-70400-3090
14-56-7222	A-70400-3160
14-56-7223	A-70400-2926
14-56-7224	A-70400-3195
14-56-7225	A-70400-3230
14-56-7226	A-70400-3265
14-56-7227	A-70400-2996
14-56-7228	A-70400-3335
14-56-7229	A-70400-3370
14-56-7230	A-70400-3056
14-56-7231	A-70400-3091
14-56-7232	A-70400-3161
14-56-7233	A-70400-2927
14-56-7234	A-70400-3196
14-56-7235	A-70400-3231
14-56-7236	A-70400-3266
14-56-7237	A-70400-2997
14-56-7238	A-70400-3336
14-56-7239	A-70400-3371
14-56-7240	A-70400-3057
14-56-7241	A-70400-3092
14-56-7242	A-70400-3162
14-56-7243	A-70400-2928
14-56-7244	A-70400-3197

Connector Series No.70400	
Order No.	Engineer No.
14-56-7245	A-70400-3232
14-56-7246	A-70400-3267
14-56-7247	A-70400-2998
14-56-7248	A-70400-3337
14-56-7249	A-70400-3372
14-56-7250	A-70400-3058
14-56-7251	A-70400-3093
14-56-7252	A-70400-3163
14-56-7253	A-70400-2929
14-56-7254	A-70400-3198
14-56-7255	A-70400-3233
14-56-7256	A-70400-3268
14-56-7257	A-70400-2999
14-56-7258	A-70400-3338
14-56-7259	A-70400-3373
14-56-8020	A-70400-3385
14-56-8021	A-70400-3420
14-56-8022	A-70400-3490
14-56-8023	A-70400-2941
14-56-8030	A-70400-3386
14-56-8031	A-70400-3421
14-56-8032	A-70400-3491
14-56-8033	A-70400-2942
14-56-8040	A-70400-3387
14-56-8041	A-70400-3422
14-56-8042	A-70400-3492
14-56-8043	A-70400-2943
14-56-8050	A-70400-3388
14-56-8051	A-70400-3423
14-56-8052	A-70400-3493
14-56-8053	A-70400-2944
14-56-8060	A-70400-3389
14-56-8061	A-70400-3424
14-56-8062	A-70400-3494
14-56-8063	A-70400-2945
14-56-8070	A-70400-3390
14-56-8071	A-70400-3425
14-56-8072	A-70400-3495
14-56-8073	A-70400-2946
14-56-8080	A-70400-3391
14-56-8081	A-70400-3426
14-56-8082	A-70400-3496
14-56-8083	A-70400-2947
14-56-8090	A-70400-3392
14-56-8091	A-70400-3427
14-56-8092	A-70400-3497
14-56-8093	A-70400-2948
14-56-8100	A-70400-3393
14-56-8101	A-70400-3428
14-56-8102	A-70400-3498
14-56-8103	A-70400-2949
14-56-8110	A-70400-3394
14-56-8111	A-70400-3429
14-56-8112	A-70400-3499
14-56-8113	A-70400-2950
14-56-8120	A-70400-3395
14-56-8121	A-70400-3430
14-56-8122	A-70400-3500
14-56-8123	A-70400-2951
14-56-8130	A-70400-3396
14-56-8131	A-70400-3431
14-56-8132	A-70400-3501
14-56-8133	A-70400-2952
14-56-8140	A-70400-3397
14-56-8141	A-70400-3432
14-56-8142	A-70400-3502
14-56-8143	A-70400-2953

Downloaded from Elcodis.com electronic components distributor

Connector Series No.70400	
Order No.	Engineer No.
14-56-8150	A-70400-3398
14-56-8151	A-70400-3433
14-56-8152	A-70400-3503
14-56-8153	A-70400-2954
14-56-8160	A-70400-3399
14-56-8161	A-70400-3434
14-56-8162	A-70400-3504
14-56-8163	A-70400-2955
14-56-8170	A-70400-3400
14-56-8171	A-70400-3435
14-56-8172	A-70400-3505
14-56-8173	A-70400-2956
14-56-8180	A-70400-3401
14-56-8181	A-70400-3436
14-56-8182	A-70400-3506
14-56-8183	A-70400-2957
14-56-8190	A-70400-3402
14-56-8191	A-70400-3437
14-56-8192	A-70400-3507
14-56-8193	A-70400-2958
14-56-8200	A-70400-3403
14-56-8201	A-70400-3438
14-56-8202	A-70400-3508
14-56-8203	A-70400-2959
14-56-8210	A-70400-3404
14-56-8211	A-70400-3439
14-56-8212	A-70400-3509
14-56-8213	A-70400-2960
14-56-8220	A-70400-3405
14-56-8221	A-70400-3440
14-56-8222	A-70400-3510
14-56-8223	A-70400-2961
14-56-8230	A-70400-3406
14-56-8231	A-70400-3441
14-56-8232	A-70400-3511
14-56-8233	A-70400-2962
14-56-8240	A-70400-3407
14-56-8241	A-70400-3442
14-56-8242	A-70400-3512
14-56-8243	A-70400-2963
14-56-8250	A-70400-3408
14-56-8251	A-70400-3443
14-56-8252	A-70400-3513
14-56-8253	A-70400-2964
14-56-9000	A-70400-5000
14-56-9001	A-70400-5001
14-56-9002	A-70400-5002
14-56-9003	A-70400-5003
14-56-9004	A-70400-5004
14-56-9005	A-70400-5005
14-56-9006	A-70400-5006
14-56-9007	A-70400-5007
14-56-9008	A-70400-5008
14-56-9009	A-70400-5009
14-56-9010	A-70400-5010
14-56-9011	A-70400-5011
14-60-0021	A-70400-0001
14-60-0022	A-70400-0141
14-60-0023	A-70400-0176
14-60-0024	A-70400-0316
14-60-0025	A-70400-0351
14-60-0026	A-70400-0491
14-60-0027	A-70400-0036
14-60-0028	A-70400-0071
14-60-0029	A-70400-0211
14-60-0031	A-70400-0002
14-60-0032	A-70400-0142

Connector Series No.70400	
Order No.	Engineer No.
14-60-0033	A-70400-0177
14-60-0034	A-70400-0317
14-60-0035	A-70400-0352
14-60-0036	A-70400-0492
14-60-0037	A-70400-0037
14-60-0038	A-70400-0072
14-60-0039	A-70400-0212
14-60-0041	A-70400-0003
14-60-0042	A-70400-0143
14-60-0043	A-70400-0178
14-60-0044	A-70400-0318
14-60-0045	A-70400-0353
14-60-0046	A-70400-0493
14-60-0047	A-70400-0038
14-60-0048	A-70400-0073
14-60-0049	A-70400-0213
14-60-0051	A-70400-0004
14-60-0052	A-70400-0144
14-60-0053	A-70400-0179
14-60-0054	A-70400-0319
14-60-0055	A-70400-0354
14-60-0056	A-70400-0494
14-60-0057	A-70400-0039
14-60-0058	A-70400-0074
14-60-0059	A-70400-0214
14-60-0061	A-70400-0005
14-60-0062	A-70400-0145
14-60-0063	A-70400-0180
14-60-0064	A-70400-0320
14-60-0065	A-70400-0355
14-60-0066	A-70400-0495
14-60-0067	A-70400-0040
14-60-0068	A-70400-0075
14-60-0069	A-70400-0215
14-60-0071	A-70400-0006
14-60-0072	A-70400-0146
14-60-0073	A-70400-0181
14-60-0074	A-70400-0321
14-60-0075	A-70400-0356
14-60-0076	A-70400-0496
14-60-0077	A-70400-0041
14-60-0078	A-70400-0076
14-60-0079	A-70400-0216
14-60-0081	A-70400-0007
14-60-0082	A-70400-0147
14-60-0083	A-70400-0182
14-60-0084	A-70400-0322
14-60-0085	A-70400-0357
14-60-0086	A-70400-0497
14-60-0087	A-70400-0042
14-60-0088	A-70400-0077
14-60-0089	A-70400-0217
14-60-0091	A-70400-0008
14-60-0092	A-70400-0148
14-60-0093	A-70400-0183
14-60-0094	A-70400-0323
14-60-0095	A-70400-0358
14-60-0096	A-70400-0498
14-60-0097	A-70400-0043
14-60-0098	A-70400-0078
14-60-0099	A-70400-0218
14-60-0101	A-70400-0009
14-60-0102	A-70400-0149
14-60-0103	A-70400-0184
14-60-0104	A-70400-0324
14-60-0105	A-70400-0359
14-60-0106	A-70400-0499

Connector Series No.70400	
Order No.	Engineer No.
14-60-0107	A-70400-0044
14-60-0108	A-70400-0079
14-60-0109	A-70400-0219
14-60-0111	A-70400-0010
14-60-0112	A-70400-0150
14-60-0113	A-70400-0185
14-60-0114	A-70400-0325
14-60-0115	A-70400-0360
14-60-0116	A-70400-0500
14-60-0117	A-70400-0045
14-60-0118	A-70400-0080
14-60-0119	A-70400-0220
14-60-0121	A-70400-0011
14-60-0122	A-70400-0151
14-60-0123	A-70400-0186
14-60-0124	A-70400-0326
14-60-0125	A-70400-0361
14-60-0126	A-70400-0501
14-60-0127	A-70400-0046
14-60-0128	A-70400-0081
14-60-0129	A-70400-0221
14-60-0131	A-70400-0012
14-60-0132	A-70400-0152
14-60-0133	A-70400-0187
14-60-0134	A-70400-0327
14-60-0135	A-70400-0362
14-60-0136	A-70400-0502
14-60-0137	A-70400-0047
14-60-0138	A-70400-0082
14-60-0139	A-70400-0222
14-60-0141	A-70400-0013
14-60-0142	A-70400-0153
14-60-0143	A-70400-0188
14-60-0144	A-70400-0328
14-60-0145	A-70400-0363
14-60-0146	A-70400-0503
14-60-0147	A-70400-0048
14-60-0148	A-70400-0083
14-60-0149	A-70400-0223
14-60-0151	A-70400-0014
14-60-0152	A-70400-0154
14-60-0153	A-70400-0189
14-60-0154	A-70400-0329
14-60-0155	A-70400-0364
14-60-0156	A-70400-0504
14-60-0157	A-70400-0049
14-60-0158	A-70400-0084
14-60-0159	A-70400-0224
14-60-0161	A-70400-0015
14-60-0162	A-70400-0155
14-60-0163	A-70400-0190
14-60-0164	A-70400-0330
14-60-0165	A-70400-0365
14-60-0166	A-70400-0505
14-60-0167	A-70400-0050
14-60-0168	A-70400-0085
14-60-0169	A-70400-0225
14-60-0171	A-70400-0016
14-60-0172	A-70400-0156
14-60-0173	A-70400-0191
14-60-0174	A-70400-0331
14-60-0175	A-70400-0366
14-60-0176	A-70400-0506
14-60-0177	A-70400-0051
14-60-0178	A-70400-0086
14-60-0179	A-70400-0226
14-60-0181	A-70400-0017

Connector Series No.70400	
Order No.	Engineer No.
14-60-0182	A-70400-0157
14-60-0183	A-70400-0192
14-60-0184	A-70400-0332
14-60-0185	A-70400-0367
14-60-0186	A-70400-0507
14-60-0187	A-70400-0052
14-60-0188	A-70400-0087
14-60-0189	A-70400-0227
14-60-0191	A-70400-0018
14-60-0192	A-70400-0158
14-60-0193	A-70400-0193
14-60-0194	A-70400-0333
14-60-0195	A-70400-0368
14-60-0196	A-70400-0508
14-60-0197	A-70400-0053
14-60-0198	A-70400-0088
14-60-0199	A-70400-0228
14-60-0201	A-70400-0019
14-60-0202	A-70400-0159
14-60-0203	A-70400-0194
14-60-0204	A-70400-0334
14-60-0205	A-70400-0369
14-60-0206	A-70400-0509
14-60-0207	A-70400-0054
14-60-0208	A-70400-0089
14-60-0209	A-70400-0229
14-60-0211	A-70400-0020
14-60-0212	A-70400-0160
14-60-0213	A-70400-0195
14-60-0214	A-70400-0335
14-60-0215	A-70400-0370
14-60-0216	A-70400-0510
14-60-0217	A-70400-0055
14-60-0218	A-70400-0090
14-60-0219	A-70400-0230
14-60-0221	A-70400-0021
14-60-0222	A-70400-0161
14-60-0223	A-70400-0196
14-60-0224	A-70400-0336
14-60-0225	A-70400-0371
14-60-0226	A-70400-0511
14-60-0227	A-70400-0056
14-60-0228	A-70400-0091
14-60-0229	A-70400-0231
14-60-0231	A-70400-0022
14-60-0232	A-70400-0162
14-60-0233	A-70400-0197
14-60-0234	A-70400-0337
14-60-0235	A-70400-0372
14-60-0236	A-70400-0512
14-60-0237	A-70400-0057
14-60-0238	A-70400-0092
14-60-0239	A-70400-0232
14-60-0241	A-70400-0023
14-60-0242	A-70400-0163
14-60-0243	A-70400-0198
14-60-0244	A-70400-0338
14-60-0245	A-70400-0373
14-60-0246	A-70400-0513
14-60-0247	A-70400-0058
14-60-0248	A-70400-0093
14-60-0249	A-70400-0233
14-60-0251	A-70400-0024
14-60-0252	A-70400-0164
14-60-0253	A-70400-0199
14-60-0254	A-70400-0339
14-60-0255	A-70400-0374

Downloaded from Elcodis.com electronic components distributor

Connector Series No.70400	
Order No.	Engineer No.
14-60-0256	A-70400-0514
14-60-0257	A-70400-0059
14-60-0258	A-70400-0094
14-60-0259	A-70400-0234
14-60-1020	A-70400-0246
14-60-1021	A-70400-0386
14-60-1022	A-70400-0421
14-60-1023	A-70400-2836
14-60-1026	A-70400-3525
14-60-1027	A-70400-3630
14-60-1028	A-70400-3560
14-60-1029	A-70400-3665
14-60-1030	A-70400-0247
14-60-1031	A-70400-0387
14-60-1032	A-70400-0422
14-60-1033	A-70400-2837
14-60-1036	A-70400-3526
14-60-1037	A-70400-3631
14-60-1038	A-70400-3561
14-60-1039	A-70400-3666
14-60-1040	A-70400-0248
14-60-1041	A-70400-0388
14-60-1042	A-70400-0423
14-60-1043	A-70400-2838
14-60-1046	A-70400-3527
14-60-1047	A-70400-3632
14-60-1048	A-70400-3562
14-60-1049	A-70400-3667
14-60-1050	A-70400-0249
14-60-1051	A-70400-0389
14-60-1052	A-70400-0424
14-60-1053	A-70400-2839
14-60-1056	A-70400-3528
14-60-1057	A-70400-3633
14-60-1058	A-70400-3563
14-60-1059	A-70400-3668
14-60-1060	A-70400-0250
14-60-1061	A-70400-0390
14-60-1062	A-70400-0425
14-60-1063	A-70400-2840
14-60-1066	A-70400-3529
14-60-1067	A-70400-3634
14-60-1068	A-70400-3564
14-60-1069	A-70400-3669
14-60-1070	A-70400-0251
14-60-1071	A-70400-0391
14-60-1072	A-70400-0426
14-60-1073	A-70400-2841
14-60-1076	A-70400-3530
14-60-1077	A-70400-3635
14-60-1078	A-70400-3565
14-60-1079	A-70400-3670
14-60-1080	A-70400-0252
14-60-1081	A-70400-0392
14-60-1082	A-70400-0427
14-60-1083	A-70400-2842
14-60-1086	A-70400-3531
14-60-1087	A-70400-3636
14-60-1088	A-70400-3566
14-60-1089	A-70400-3671
14-60-1090	A-70400-0253
14-60-1091	A-70400-0393
14-60-1092	A-70400-0428
14-60-1093	A-70400-2843
14-60-1096	A-70400-3532
14-60-1097	A-70400-3637
14-60-1098	A-70400-3567

Connector Series No.70400	
Order No.	Engineer No.
14-60-1099	A-70400-3672
14-60-1100	A-70400-0254
14-60-1101	A-70400-0394
14-60-1102	A-70400-0429
14-60-1103	A-70400-2844
14-60-1106	A-70400-3533
14-60-1107	A-70400-3638
14-60-1108	A-70400-3568
14-60-1109	A-70400-3673
14-60-1110	A-70400-0255
14-60-1111	A-70400-0395
14-60-1112	A-70400-0430
14-60-1113	A-70400-2845
14-60-1116	A-70400-3534
14-60-1117	A-70400-3639
14-60-1118	A-70400-3569
14-60-1119	A-70400-3674
14-60-1120	A-70400-0256
14-60-1121	A-70400-0396
14-60-1122	A-70400-0431
14-60-1123	A-70400-2846
14-60-1126	A-70400-3535
14-60-1127	A-70400-3640
14-60-1128	A-70400-3570
14-60-1129	A-70400-3675
14-60-1130	A-70400-0257
14-60-1131	A-70400-0397
14-60-1132	A-70400-0432
14-60-1133	A-70400-2847
14-60-1136	A-70400-3536
14-60-1137	A-70400-3641
14-60-1138	A-70400-3571
14-60-1139	A-70400-3676
14-60-1140	A-70400-0258
14-60-1141	A-70400-0398
14-60-1142	A-70400-0433
14-60-1143	A-70400-2848
14-60-1146	A-70400-3537
14-60-1147	A-70400-3642
14-60-1148	A-70400-3572
14-60-1149	A-70400-3677
14-60-1150	A-70400-0259
14-60-1151	A-70400-0399
14-60-1152	A-70400-0434
14-60-1153	A-70400-2849
14-60-1156	A-70400-3538
14-60-1157	A-70400-3643
14-60-1158	A-70400-3573
14-60-1159	A-70400-3678
14-60-1160	A-70400-0260
14-60-1161	A-70400-0400
14-60-1162	A-70400-0435
14-60-1163	A-70400-2850
14-60-1166	A-70400-3539
14-60-1167	A-70400-3644
14-60-1168	A-70400-3574
14-60-1169	A-70400-3679
14-60-1170	A-70400-0261
14-60-1171	A-70400-0401
14-60-1172	A-70400-0436
14-60-1173	A-70400-2851
14-60-1176	A-70400-3540
14-60-1177	A-70400-3645
14-60-1178	A-70400-3575
14-60-1179	A-70400-3680
14-60-1180	A-70400-0262
14-60-1181	A-70400-0402

Connector Series No.70400	
Order No.	Engineer No.
14-60-1182	A-70400-0437
14-60-1183	A-70400-2852
14-60-1186	A-70400-3541
14-60-1187	A-70400-3646
14-60-1188	A-70400-3576
14-60-1189	A-70400-3681
14-60-1190	A-70400-0263
14-60-1191	A-70400-0403
14-60-1192	A-70400-0438
14-60-1193	A-70400-2853
14-60-1196	A-70400-3542
14-60-1197	A-70400-3647
14-60-1198	A-70400-3577
14-60-1199	A-70400-3682
14-60-1200	A-70400-0264
14-60-1201	A-70400-0404
14-60-1202	A-70400-0439
14-60-1203	A-70400-2854
14-60-1206	A-70400-3543
14-60-1207	A-70400-3648
14-60-1208	A-70400-3578
14-60-1209	A-70400-3683
14-60-1210	A-70400-0265
14-60-1211	A-70400-0405
14-60-1212	A-70400-0440
14-60-1213	A-70400-2855
14-60-1216	A-70400-3544
14-60-1217	A-70400-3649
14-60-1218	A-70400-3579
14-60-1219	A-70400-3684
14-60-1220	A-70400-0266
14-60-1221	A-70400-0406
14-60-1222	A-70400-0441
14-60-1223	A-70400-2856
14-60-1226	A-70400-3545
14-60-1227	A-70400-3650
14-60-1228	A-70400-3580
14-60-1229	A-70400-3685
14-60-1230	A-70400-0267
14-60-1231	A-70400-0407
14-60-1232	A-70400-0442
14-60-1233	A-70400-2857
14-60-1236	A-70400-3546
14-60-1237	A-70400-3651
14-60-1238	A-70400-3581
14-60-1239	A-70400-3686
14-60-1240	A-70400-0268
14-60-1241	A-70400-0408
14-60-1242	A-70400-0443
14-60-1243	A-70400-2858
14-60-1246	A-70400-3547
14-60-1247	A-70400-3652
14-60-1248	A-70400-3582
14-60-1249	A-70400-3687
14-60-1250	A-70400-0269
14-60-1251	A-70400-0409
14-60-1252	A-70400-0444
14-60-1253	A-70400-2859
14-60-1256	A-70400-3548
14-60-1257	A-70400-3653
14-60-1258	A-70400-3583
14-60-1259	A-70400-3688
14-60-2020	A-70400-3700
14-60-2021	A-70400-3595
14-60-2022	A-70400-3735
14-60-2030	A-70400-3701
14-60-2031	A-70400-3596

Connector Series No.70400	
Order No.	Engineer No.
14-60-2032	A-70400-3736
14-60-2040	A-70400-3702
14-60-2041	A-70400-3597
14-60-2042	A-70400-3737
14-60-2044	A-70400-4146
14-60-2050	A-70400-3703
14-60-2051	A-70400-3598
14-60-2052	A-70400-3738
14-60-2053	A-70400-4123
14-60-2060	A-70400-3704
14-60-2061	A-70400-3599
14-60-2062	A-70400-3739
14-60-2070	A-70400-3705
14-60-2071	A-70400-3600
14-60-2072	A-70400-3740
14-60-2080	A-70400-3706
14-60-2081	A-70400-3601
14-60-2082	A-70400-3741
14-60-2083	A-70400-4126
14-60-2084	A-70400-4150
14-60-2090	A-70400-3707
14-60-2091	A-70400-3602
14-60-2092	A-70400-3742
14-60-2100	A-70400-3708
14-60-2101	A-70400-3603
14-60-2102	A-70400-3743
14-60-2110	A-70400-3709
14-60-2111	A-70400-3604
14-60-2112	A-70400-3744
14-60-2120	A-70400-3710
14-60-2121	A-70400-3605
14-60-2122	A-70400-3745
14-60-2130	A-70400-3711
14-60-2131	A-70400-3606
14-60-2132	A-70400-3746
14-60-2140	A-70400-3712
14-60-2141	A-70400-3607
14-60-2142	A-70400-3747
14-60-2150	A-70400-3713
14-60-2151	A-70400-3608
14-60-2152	A-70400-3748
14-60-2160	A-70400-3714
14-60-2161	A-70400-3609
14-60-2162	A-70400-3749
14-60-2170	A-70400-3715
14-60-2171	A-70400-3610
14-60-2172	A-70400-3750
14-60-2180	A-70400-3716
14-60-2181	A-70400-3611
14-60-2182	A-70400-3751
14-60-2190	A-70400-3717
14-60-2191	A-70400-3612
14-60-2192	A-70400-3752
14-60-2200	A-70400-3718
14-60-2201	A-70400-3613
14-60-2202	A-70400-3753
14-60-2210	A-70400-3719
14-60-2211	A-70400-3614
14-60-2212	A-70400-3754
14-60-2220	A-70400-3720
14-60-2221	A-70400-3615
14-60-2222	A-70400-3755
14-60-2230	A-70400-3721
14-60-2231	A-70400-3616
14-60-2232	A-70400-3756
14-60-2240	A-70400-3722
14-60-2241	A-70400-3617

Downloaded from Elcodis.com electronic components distributor

Connector Series No.70400	
Order No.	Engineer No.
14-60-2242	A-70400-3757
14-60-2250	A-70400-3723
14-60-2251	A-70400-3618
14-60-2252	A-70400-3758
14-60-4101	A-70400-0114
14-60-5023	A-70400-4050
14-60-5024	A-70400-4085
14-60-5033	A-70400-4051
14-60-5034	A-70400-4086
14-60-5043	A-70400-4052
14-60-5044	A-70400-4087
14-60-5053	A-70400-4053
14-60-5054	A-70400-4088
14-60-5063	A-70400-4054

Connector Series No.70400	
Order No.	Engineer No.
14-60-5064	A-70400-4089
14-60-5073	A-70400-4055
14-60-5074	A-70400-4090
14-60-5083	A-70400-4056
14-60-5084	A-70400-4091
14-60-5093	A-70400-4057
14-60-5094	A-70400-4092
14-60-5103	A-70400-4058
14-60-5104	A-70400-4093
14-60-5113	A-70400-4059
14-60-5114	A-70400-4094
14-60-5123	A-70400-4060
14-60-5124	A-70400-4095
14-60-5133	A-70400-4061

Connector Series No.70400	
Order No.	Engineer No.
14-60-5134	A-70400-4096
14-60-5143	A-70400-4062
14-60-5144	A-70400-4097
14-60-5153	A-70400-4063
14-60-5154	A-70400-4098
14-60-5160	A-70400-3959
14-60-5161	A-70400-3994
14-60-5162	A-70400-4029
14-60-5163	A-70400-4064
14-60-5164	A-70400-4099
14-60-5173	A-70400-4065
14-60-5174	A-70400-4100
14-60-5183	A-70400-4066
14-60-5184	A-70400-4101

Connector Series No.70400	
Order No.	Engineer No.
14-60-5193	A-70400-4067
14-60-5194	A-70400-4102
14-60-5203	A-70400-4068
14-60-5204	A-70400-4103
14-60-5213	A-70400-4069
14-60-5214	A-70400-4104
14-60-5223	A-70400-4070
14-60-5224	A-70400-4105
14-60-5233	A-70400-4071
14-60-5234	A-70400-4106
14-60-5243	A-70400-4072
14-60-5244	A-70400-4107
14-60-5253	A-70400-4073
14-60-5254	A-70400-4108

Connector Series No.70475	
Order No.	Engineer No.
14-44-1002	A-70475-0526
14-44-1003	A-70475-0527
14-44-1004	A-70475-0528
14-44-1005	A-70475-0529
14-44-1006	A-70475-0530
14-44-1007	A-70475-0531
14-44-1008	A-70475-0532
14-44-1009	A-70475-0533
14-44-1010	A-70475-0534
14-44-1011	A-70475-0535
14-44-1012	A-70475-0536
14-44-1013	A-70475-0537
14-44-1014	A-70475-0538
14-44-1015	A-70475-0539
14-44-1016	A-70475-0540
14-44-1017	A-70475-0541
14-44-1018	A-70475-0542
14-44-1019	A-70475-0543
14-44-1020	A-70475-0544
14-44-1021	A-70475-0545
14-44-1022	A-70475-0546
14-44-1023	A-70475-0547
14-44-1024	A-70475-0548
14-44-1025	A-70475-0549
14-44-1202	A-70475-0596
14-44-1203	A-70475-0597
14-44-1204	A-70475-0598
14-44-1205	A-70475-0599
14-44-1206	A-70475-0600
14-44-1207	A-70475-0601
14-44-1208	A-70475-0602
14-44-1209	A-70475-0603
14-44-1210	A-70475-0604
14-44-1211	A-70475-0605
14-44-1212	A-70475-0606
14-44-1213	A-70475-0607
14-44-1214	A-70475-0608
14-44-1215	A-70475-0609
14-44-1216	A-70475-0610
14-44-1217	A-70475-0611
14-44-1218	A-70475-0612
14-44-1219	A-70475-0613
14-44-1220	A-70475-0614
14-44-1221	A-70475-0615
14-44-1222	A-70475-0616
14-44-1223	A-70475-0617
14-44-1224	A-70475-0618
14-44-1225	A-70475-0619

Connector Series No.70475	
Order No.	Engineer No.
14-44-1402	A-70475-0701
14-44-1403	A-70475-0702
14-44-1404	A-70475-0703
14-44-1405	A-70475-0704
14-44-1406	A-70475-0705
14-44-1407	A-70475-0706
14-44-1408	A-70475-0707
14-44-1409	A-70475-0708
14-44-1410	A-70475-0709
14-44-1411	A-70475-0710
14-44-1412	A-70475-0711
14-44-1413	A-70475-0712
14-44-1414	A-70475-0713
14-44-1415	A-70475-0714
14-44-1416	A-70475-0715
14-44-1417	A-70475-0716
14-44-1418	A-70475-0717
14-44-1419	A-70475-0718
14-44-1420	A-70475-0719
14-44-1421	A-70475-0720
14-44-1422	A-70475-0721
14-44-1423	A-70475-0722
14-44-1424	A-70475-0723
14-44-1425	A-70475-0724
14-44-1602	A-70475-0771
14-44-1603	A-70475-0772
14-44-1604	A-70475-0773
14-44-1605	A-70475-0774
14-44-1606	A-70475-0775
14-44-1607	A-70475-0776
14-44-1608	A-70475-0777
14-44-1609	A-70475-0778
14-44-1610	A-70475-0779
14-44-1611	A-70475-0780
14-44-1612	A-70475-0781
14-44-1613	A-70475-0782
14-44-1614	A-70475-0783
14-44-1615	A-70475-0784
14-44-1616	A-70475-0785
14-44-1617	A-70475-0786
14-44-1618	A-70475-0787
14-44-1619	A-70475-0788
14-44-1620	A-70475-0789
14-44-1621	A-70475-0790
14-44-1622	A-70475-0791
14-44-1623	A-70475-0792
14-44-1624	A-70475-0793
14-44-1625	A-70475-0794

Connector Series No.70475	
Order No.	Engineer No.
14-44-1802	A-70475-0876
14-44-1803	A-70475-0877
14-44-1804	A-70475-0878
14-44-1805	A-70475-0879
14-44-1806	A-70475-0880
14-44-1807	A-70475-0881
14-44-1808	A-70475-0882
14-44-1809	A-70475-0883
14-44-1810	A-70475-0884
14-44-1811	A-70475-0885
14-44-1812	A-70475-0886
14-44-1813	A-70475-0887
14-44-1814	A-70475-0888
14-44-1815	A-70475-0889
14-44-1816	A-70475-0890
14-44-1817	A-70475-0891
14-44-1818	A-70475-0892
14-44-1819	A-70475-0893
14-44-1820	A-70475-0894
14-44-1821	A-70475-0895
14-44-1822	A-70475-0896
14-44-1823	A-70475-0897
14-44-1824	A-70475-0898
14-44-1825	A-70475-0899
14-44-2102	A-70475-0946
14-44-2103	A-70475-0947
14-44-2104	A-70475-0948
14-44-2105	A-70475-0949
14-44-2106	A-70475-0950
14-44-2107	A-70475-0951
14-44-2108	A-70475-0952
14-44-2109	A-70475-0953
14-44-2110	A-70475-0954
14-44-2111	A-70475-0955
14-44-2112	A-70475-0956
14-44-2113	A-70475-0957
14-44-2114	A-70475-0958
14-44-2115	A-70475-0959
14-44-2116	A-70475-0960
14-44-2117	A-70475-0961
14-44-2118	A-70475-0962
14-44-2119	A-70475-0963
14-44-2120	A-70475-0964
14-44-2121	A-70475-0965
14-44-2122	A-70475-0966
14-44-2123	A-70475-0967
14-44-2124	A-70475-0968
14-44-2125	A-70475-0969

Connector Series No.70475	
Order No.	Engineer No.
14-44-2302	A-70475-1051
14-44-2303	A-70475-1052
14-44-2304	A-70475-1053
14-44-2305	A-70475-1054
14-44-2306	A-70475-1055
14-44-2307	A-70475-1056
14-44-2308	A-70475-1057
14-44-2309	A-70475-1058
14-44-2310	A-70475-1059
14-44-2311	A-70475-1060
14-44-2312	A-70475-1061
14-44-2313	A-70475-1062
14-44-2314	A-70475-1063
14-44-2315	A-70475-1064
14-44-2316	A-70475-1065
14-44-2317	A-70475-1066
14-44-2318	A-70475-1067
14-44-2319	A-70475-1068
14-44-2320	A-70475-1069
14-44-2321	A-70475-1070
14-44-2322	A-70475-1071
14-44-2323	A-70475-1072
14-44-2324	A-70475-1073
14-44-2325	A-70475-1074
14-44-2502	A-70475-1121
14-44-2503	A-70475-1122
14-44-2504	A-70475-1123
14-44-2505	A-70475-1124
14-44-2506	A-70475-1125
14-44-2507	A-70475-1126
14-44-2508	A-70475-1127
14-44-2509	A-70475-1128
14-44-2510	A-70475-1129
14-44-2511	A-70475-1130
14-44-2512	A-70475-1131
14-44-2513	A-70475-1132
14-44-2514	A-70475-1133
14-44-2515	A-70475-1134
14-44-2516	A-70475-1135
14-44-2517	A-70475-1136
14-44-2518	A-70475-1137
14-44-2519	A-70475-1138
14-44-2520	A-70475-1139
14-44-2521	A-70475-1140
14-44-2522	A-70475-1141
14-44-2523	A-70475-1142
14-44-2524	A-70475-1143
14-44-2525	A-70475-1144

Downloaded from Elcodis.com electronic components distributor

Connector Series No.70475	
Order No.	Engineer No.
14-44-2702	A-70475-1226
14-44-2703	A-70475-1227
14-44-2704	A-70475-1228
14-44-2705	A-70475-1229
14-44-2706	A-70475-1230
14-44-2707	A-70475-1231
14-44-2708	A-70475-1232
14-44-2709	A-70475-1233
14-44-2710	A-70475-1234
14-44-2711	A-70475-1235
14-44-2712	A-70475-1236
14-44-2713	A-70475-1237
14-44-2714	A-70475-1238
14-44-2715	A-70475-1239
14-44-2716	A-70475-1240
14-44-2717	A-70475-1241
14-44-2718	A-70475-1242
14-44-2719	A-70475-1243
14-44-2720	A-70475-1244
14-44-2721	A-70475-1245
14-44-2722	A-70475-1246
14-44-2723	A-70475-1247
14-44-2724	A-70475-1248
14-44-2725	A-70475-1249
14-44-2902	A-70475-1296
14-44-2903	A-70475-1297
14-44-2904	A-70475-1298
14-44-2905	A-70475-1299
14-44-2906	A-70475-1300
14-44-2907	A-70475-1301
14-44-2908	A-70475-1302
14-44-2909	A-70475-1303
14-44-2910	A-70475-1304
14-44-2911	A-70475-1305
14-44-2912	A-70475-1306
14-44-2913	A-70475-1307
14-44-2914	A-70475-1308
14-44-2915	A-70475-1309
14-44-2916	A-70475-1310
14-44-2917	A-70475-1311
14-44-2918	A-70475-1312
14-44-2919	A-70475-1313
14-44-2920	A-70475-1314
14-44-2921	A-70475-1315
14-44-2922	A-70475-1316
14-44-2923	A-70475-1317
14-44-2924	A-70475-1318
14-44-2925	A-70475-1319
14-44-3902	A-70475-1401
14-44-3903	A-70475-1402
14-44-3904	A-70475-1403
14-44-3905	A-70475-1404
14-44-3906	A-70475-1405
14-44-3907	A-70475-1406
14-44-3908	A-70475-1407
14-44-3909	A-70475-1408
14-44-3910	A-70475-1409
14-44-3911	A-70475-1410
14-44-3912	A-70475-1411
14-44-3913	A-70475-1412
14-44-3914	A-70475-1413
14-44-3915	A-70475-1414
14-44-3916	A-70475-1415
14-44-3917	A-70475-1416
14-44-3918	A-70475-1417
14-44-3919	A-70475-1418
14-44-3920	A-70475-1419

Connector Series No.70475	
Order No.	Engineer No.
14-44-3921	A-70475-1420
14-44-3922	A-70475-1421
14-44-3923	A-70475-1422
14-44-3924	A-70475-1423
14-44-3925	A-70475-1424
14-44-4902	A-70475-1471
14-44-4903	A-70475-1472
14-44-4904	A-70475-1473
14-44-4905	A-70475-1474
14-44-4906	A-70475-1475
14-44-4907	A-70475-1476
14-44-4908	A-70475-1477
14-44-4909	A-70475-1478
14-44-4910	A-70475-1479
14-44-4911	A-70475-1480
14-44-4912	A-70475-1481
14-44-4913	A-70475-1482
14-44-4914	A-70475-1483
14-44-4915	A-70475-1484
14-44-4916	A-70475-1485
14-44-4917	A-70475-1486
14-44-4918	A-70475-1487
14-44-4919	A-70475-1488
14-44-4920	A-70475-1489
14-44-4921	A-70475-1490
14-44-4922	A-70475-1491
14-44-4923	A-70475-1492
14-44-4924	A-70475-1493
14-44-4925	A-70475-1494
14-44-5202	A-70475-2171
14-44-5203	A-70475-2172
14-44-5204	A-70475-2173
14-44-5205	A-70475-2174
14-44-5206	A-70475-2175
14-44-5207	A-70475-2176
14-44-5208	A-70475-2177
14-44-5209	A-70475-2178
14-44-5210	A-70475-2179
14-44-5211	A-70475-2180
14-44-5212	A-70475-2181
14-44-5213	A-70475-2182
14-44-5214	A-70475-2183
14-44-5215	A-70475-2184
14-44-5216	A-70475-2185
14-44-5217	A-70475-2186
14-44-5218	A-70475-2187
14-44-5219	A-70475-2188
14-44-5220	A-70475-2189
14-44-5221	A-70475-2190
14-44-5222	A-70475-2191
14-44-5223	A-70475-2192
14-44-5224	A-70475-2193
14-44-5225	A-70475-2194
14-44-5302	A-70475-2346
14-44-5303	A-70475-2347
14-44-5304	A-70475-2348
14-44-5305	A-70475-2349
14-44-5306	A-70475-2350
14-44-5307	A-70475-2351
14-44-5308	A-70475-2352
14-44-5309	A-70475-2353
14-44-5310	A-70475-2354
14-44-5311	A-70475-2355
14-44-5312	A-70475-2356
14-44-5313	A-70475-2357
14-44-5314	A-70475-2358
14-44-5315	A-70475-2359

Connector Series No.70475	
Order No.	Engineer No.
14-44-5316	A-70475-2360
14-44-5317	A-70475-2361
14-44-5318	A-70475-2362
14-44-5319	A-70475-2363
14-44-5320	A-70475-2364
14-44-5321	A-70475-2365
14-44-5322	A-70475-2366
14-44-5323	A-70475-2367
14-44-5324	A-70475-2368
14-44-5325	A-70475-2369
14-44-5402	A-70475-2521
14-44-5403	A-70475-2522
14-44-5404	A-70475-2523
14-44-5405	A-70475-2524
14-44-5406	A-70475-2525
14-44-5407	A-70475-2526
14-44-5408	A-70475-2527
14-44-5409	A-70475-2528
14-44-5410	A-70475-2529
14-44-5411	A-70475-2530
14-44-5412	A-70475-2531
14-44-5413	A-70475-2532
14-44-5414	A-70475-2533
14-44-5415	A-70475-2534
14-44-5416	A-70475-2535
14-44-5417	A-70475-2536
14-44-5418	A-70475-2537
14-44-5419	A-70475-2538
14-44-5420	A-70475-2539
14-44-5421	A-70475-2540
14-44-5422	A-70475-2541
14-44-5423	A-70475-2542
14-44-5424	A-70475-2543
14-44-5425	A-70475-2544
14-44-5502	A-70475-2101
14-44-5503	A-70475-2102
14-44-5504	A-70475-2103
14-44-5505	A-70475-2104
14-44-5506	A-70475-2105
14-44-5507	A-70475-2106
14-44-5508	A-70475-2107
14-44-5509	A-70475-2108
14-44-5510	A-70475-2109
14-44-5511	A-70475-2110
14-44-5512	A-70475-2111
14-44-5513	A-70475-2112
14-44-5514	A-70475-2113
14-44-5515	A-70475-2114
14-44-5516	A-70475-2115
14-44-5517	A-70475-2116
14-44-5518	A-70475-2117
14-44-5519	A-70475-2118
14-44-5520	A-70475-2119
14-44-5521	A-70475-2120
14-44-5522	A-70475-2121
14-44-5523	A-70475-2122
14-44-5524	A-70475-2123
14-44-5525	A-70475-2124
14-45-0002	A-70475-0001
14-45-0003	A-70475-0002
14-45-0004	A-70475-0003
14-45-0005	A-70475-0004
14-45-0006	A-70475-0005
14-45-0007	A-70475-0006
14-45-0008	A-70475-0007
14-45-0009	A-70475-0008
14-45-0010	A-70475-0009

Connector Series No.70475	
Order No.	Engineer No.
14-45-0011	A-70475-0010
14-45-0012	A-70475-0011
14-45-0013	A-70475-0012
14-45-0014	A-70475-0013
14-45-0015	A-70475-0014
14-45-0016	A-70475-0015
14-45-0017	A-70475-0016
14-45-0018	A-70475-0017
14-45-0019	A-70475-0018
14-45-0020	A-70475-0019
14-45-0021	A-70475-0020
14-45-0022	A-70475-0021
14-45-0023	A-70475-0022
14-45-0024	A-70475-0023
14-45-0025	A-70475-0024
14-45-0202	A-70475-0071
14-45-0203	A-70475-0072
14-45-0204	A-70475-0073
14-45-0205	A-70475-0074
14-45-0206	A-70475-0075
14-45-0207	A-70475-0076
14-45-0208	A-70475-0077
14-45-0209	A-70475-0078
14-45-0210	A-70475-0079
14-45-0211	A-70475-0080
14-45-0212	A-70475-0081
14-45-0213	A-70475-0082
14-45-0214	A-70475-0083
14-45-0215	A-70475-0084
14-45-0216	A-70475-0085
14-45-0217	A-70475-0086
14-45-0218	A-70475-0087
14-45-0219	A-70475-0088
14-45-0220	A-70475-0089
14-45-0221	A-70475-0090
14-45-0222	A-70475-0091
14-45-0223	A-70475-0092
14-45-0224	A-70475-0093
14-45-0225	A-70475-0094
14-45-0402	A-70475-0176
14-45-0403	A-70475-0177
14-45-0404	A-70475-0178
14-45-0405	A-70475-0179
14-45-0406	A-70475-0180
14-45-0407	A-70475-0181
14-45-0408	A-70475-0182
14-45-0409	A-70475-0183
14-45-0410	A-70475-0184
14-45-0411	A-70475-0185
14-45-0412	A-70475-0186
14-45-0413	A-70475-0187
14-45-0414	A-70475-0188
14-45-0415	A-70475-0189
14-45-0416	A-70475-0190
14-45-0417	A-70475-0191
14-45-0418	A-70475-0192
14-45-0419	A-70475-0193
14-45-0420	A-70475-0194
14-45-0421	A-70475-0195
14-45-0422	A-70475-0196
14-45-0423	A-70475-0197
14-45-0424	A-70475-0198
14-45-0425	A-70475-0199
14-45-0602	A-70475-0246
14-45-0603	A-70475-0247
14-45-0604	A-70475-0248
14-45-0605	A-70475-0249

Downloaded from Elcodis.com electronic components distributor

Connector Series No.70475	
Order No.	Engineer No.
14-45-0606	A-70475-0250
14-45-0607	A-70475-0251
14-45-0608	A-70475-0252
14-45-0609	A-70475-0253
14-45-0610	A-70475-0254
14-45-0611	A-70475-0255
14-45-0612	A-70475-0256
14-45-0613	A-70475-0257
14-45-0614	A-70475-0258
14-45-0615	A-70475-0259
14-45-0616	A-70475-0260
14-45-0617	A-70475-0261
14-45-0618	A-70475-0262
14-45-0619	A-70475-0263
14-45-0620	A-70475-0264
14-45-0621	A-70475-0265
14-45-0622	A-70475-0266
14-45-0623	A-70475-0267

Connector Series No.70475	
Order No.	Engineer No.
14-45-0624	A-70475-0268
14-45-0625	A-70475-0269
14-45-1602	A-70475-0351
14-45-1603	A-70475-0352
14-45-1604	A-70475-0353
14-45-1605	A-70475-0354
14-45-1606	A-70475-0355
14-45-1607	A-70475-0356
14-45-1608	A-70475-0357
14-45-1609	A-70475-0358
14-45-1610	A-70475-0359
14-45-1611	A-70475-0360
14-45-1612	A-70475-0361
14-45-1613	A-70475-0362
14-45-1614	A-70475-0363
14-45-1615	A-70475-0364
14-45-1616	A-70475-0365
14-45-1617	A-70475-0366

Connector Series No.70475	
Order No.	Engineer No.
14-45-1618	A-70475-0367
14-45-1619	A-70475-0368
14-45-1620	A-70475-0369
14-45-1621	A-70475-0370
14-45-1622	A-70475-0371
14-45-1623	A-70475-0372
14-45-1624	A-70475-0373
14-45-1625	A-70475-0374
14-45-1802	A-70475-0421
14-45-1803	A-70475-0422
14-45-1804	A-70475-0423
14-45-1805	A-70475-0424
14-45-1806	A-70475-0425
14-45-1807	A-70475-0426
14-45-1808	A-70475-0427
14-45-1809	A-70475-0428
14-45-1810	A-70475-0429
14-45-1811	A-70475-0430

Connector Series No.70475	
Order No.	Engineer No.
14-45-1812	A-70475-0431
14-45-1813	A-70475-0432
14-45-1814	A-70475-0433
14-45-1815	A-70475-0434
14-45-1816	A-70475-0435
14-45-1817	A-70475-0436
14-45-1818	A-70475-0437
14-45-1819	A-70475-0438
14-45-1820	A-70475-0439
14-45-1821	A-70475-0440
14-45-1822	A-70475-0441
14-45-1823	A-70475-0442
14-45-1824	A-70475-0443
14-45-1825	A-70475-0444

DESCRIPTION

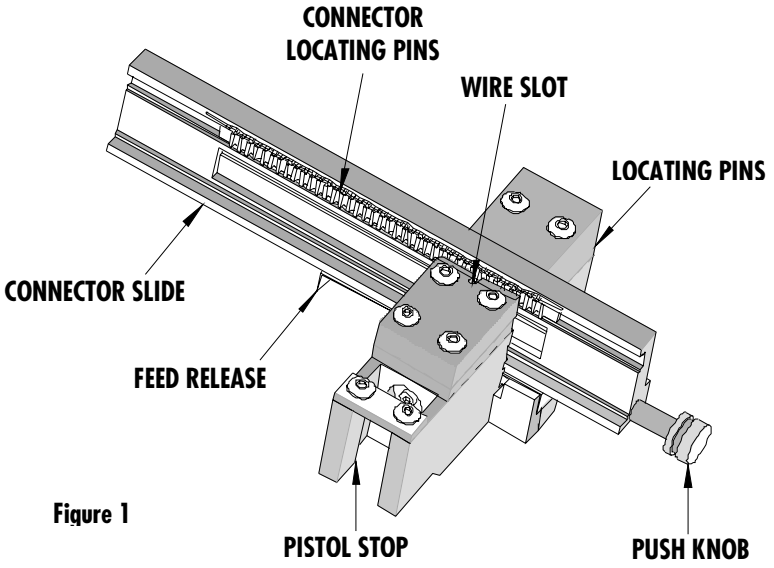

Figure 1

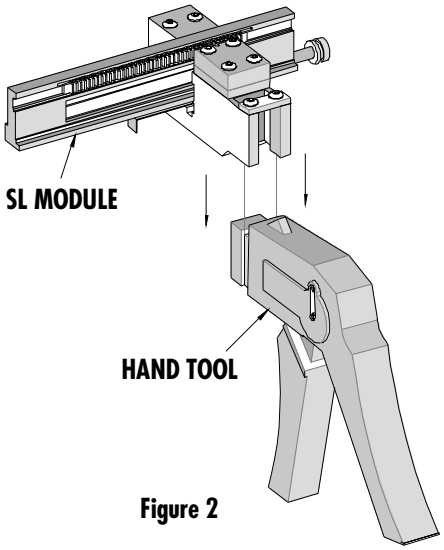

Figure 2

INSTALLATION

To install the SL Module onto the hand tool, align the module and the tool as shown in Figure 2. Push the module down onto the hand tool until the stop on the module is firmly seated in the groove in the hand tool.

Downloaded from Elcodis.com electronic components distributor

Termination Depth Adjustment

The proper termination depth is the wire diameter plus .008".
See Figure 3.

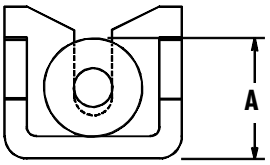

Figure 3

1. To adjust the depth of insertion of a wire into a terminal, remove the module from the hand tool.
2. Locate the adjusting screw on the back of the module. See Figure 4.
3. Turn this screw counterclockwise (CCW) to increase the depth or clockwise (CW) to decrease the insertion depth.

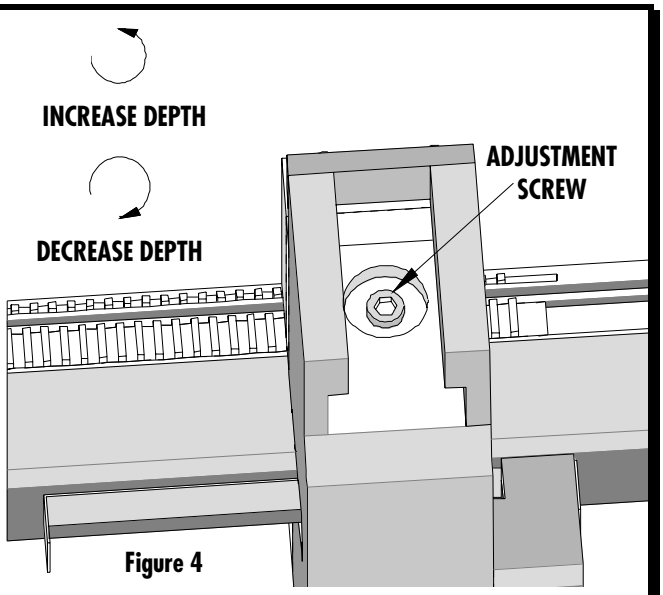

Figure 4

The termination depth can also be adjusted on the hand tool handle, see the hand tool handle instruction manual Order No. 63600-0478.
See also product specification SDES-70400 for more information.

OPERATION

1. To unlock the connector slide, push the feed release all the way to the right. See Figure 6.
2. Now shift the connector slide all the way back to the left by using the push knob on the end of the slide. See Figure 6.
3. Load a connector onto the connector slide by engaging the holes in the carrier strip onto the locating pins in the slide. See Figure 5. Make sure the first terminal on the connector is over the first termination position to the right on the connector slide.
4. While pressing the locating pin on the front of the SL module and pushing the connector slide at the same time to the right until it stops. This should put the first terminal in front of the wire slot. See Figure 6.
5. Place a wire into the wire slot and push down till it hits the wire stop. See Figure 7. This will determine the wire positioning in the terminal.

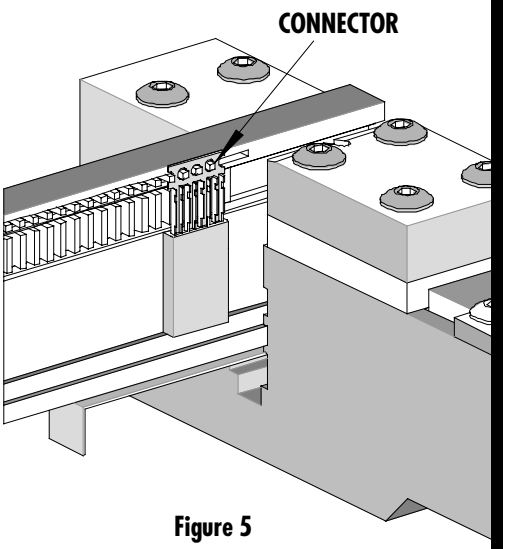

Figure 5

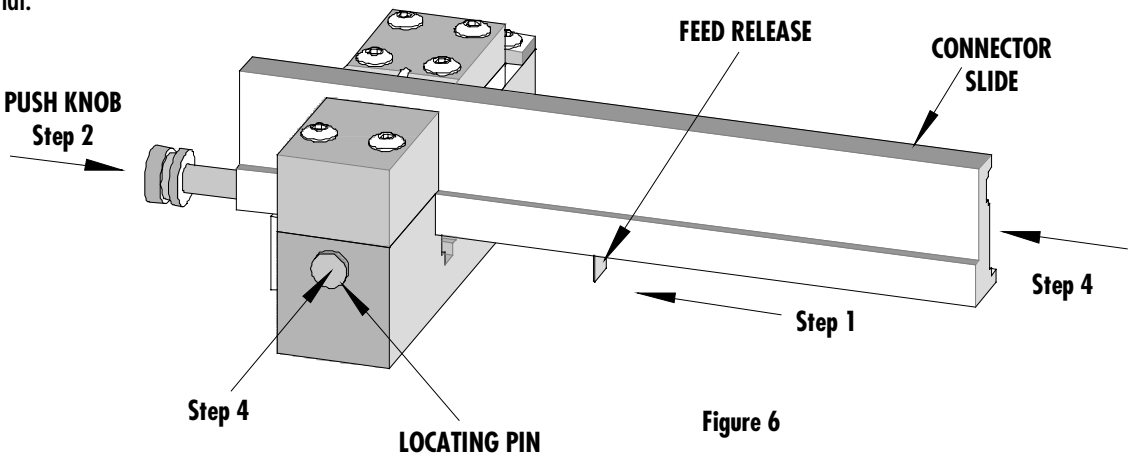

Figure 6

Downloaded from Elcodis.com electronic components distributor

6. While holding the wire in place, squeeze the hand tool trigger. This will insert the wire into the terminal.

NOTE: There is a full stroke ratchet on the hand tool to insure complete termination. If something jams, the ratchet mechanism can be released by pushing upward on the ratchet pawl at the base of the trigger. See Figure 8.

7. Gently release the trigger. The connector slide will automatically index to the next position.
8. Repeat steps 5, 6, and 7 until all wires are terminated.
9. Push the feed release to the right to unlock the slide.
10. Push the slide all the way to the right and remove the completed connector assembly from the slide.
11. Return to step 2 to continue.

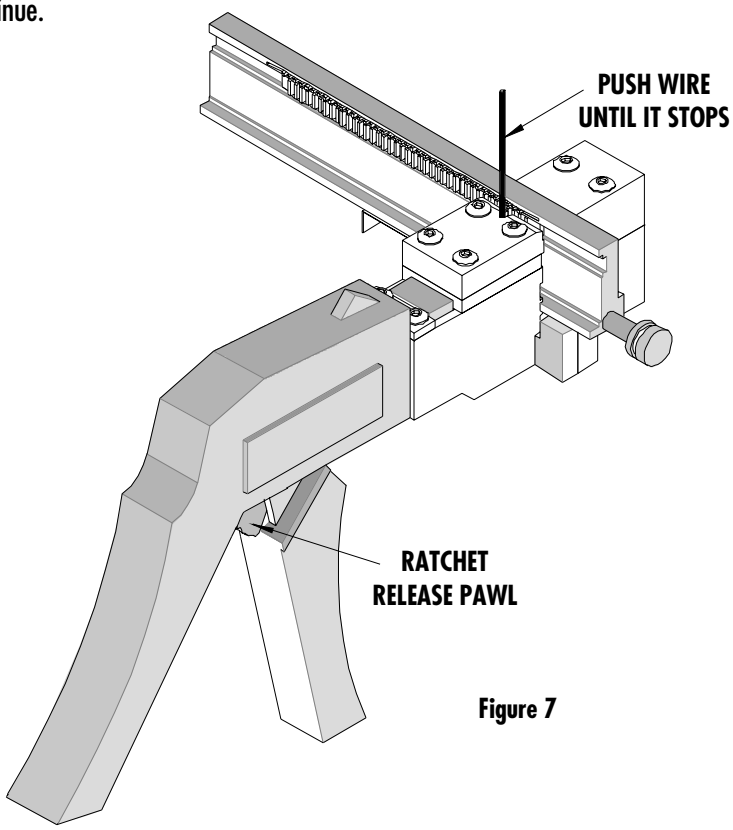

Figure 7

Notes:

1. Molex does not repair hand tools modules. If the module becomes damaged, a new tool must be purchased. See Hand Tool Manual (Order No. 63600-0478) for replacement parts for that tool.
2. Molex does not certify crimp hand tools.

CAUTION: Molex specifications are valid only when used with Molex terminals, applicators and tooling.

Application Tooling Group
1150 E. Diehl Road
Naperville, IL, 60563
Tel: 630-969-4550
Fax: 630-505-0049

Visit our Web site at http://www.molex.com

Downloaded from Elcodis.com electronic components distributor